Promec
FITTINGS

Innesti rapidi, raccordi, tubi flessibili, collettori e accessori

Quick couplings, fittings, flexible hoses, collectors and accessories

Cat_05-2022

Promec
FITTINGS

INDICE GENERALE – MAIN INDEX

INNESTI RAPIDI QUICK COUPLINGS		7
TAPPI PLUGS		95
RACCORDERIA FITTINGS		103
RACCORDATURA TUBI HOSE FITTINGS		125
DEVIAZIONE FLUSSO FLOW DIVERTING		147
VALVOLE VALVES		159
TUBI FLESSIBILI FLEXIBLE HOSES		167
DISTRIBUTORI MANIFOLDS		187
CONTROLLO FLUSSO FLOW CONTROL		233
TERMOREGOLAZIONE THERMOREGULATION		249
ATTREZZATURE E ACCESSORI VARI EQUIPEMENTS AND ACCESSORIES		253

PlaSteel group

Plasteel Group nasce dalla passione per la ricerca dell'eccellenza volta a soddisfare al meglio ogni singola esigenza del nostro cliente.

Ranco: normalizzati ed elementi di guida per plastica e lamiera, autolubrificanti, componenti ingegnerizzati, particolari lavorati a disegno.

iHR: sistemi di iniezione e centraline di controllo per stampi a iniezione plastica, lavorazioni meccaniche di precisione.

Tecnostar Group: portastampi serie Europa, utensileria meccanica.

Technology & Solutions: macchine Laser e accessori per saldatura, taglio, tempra, cladding, incisione e marcatura.

Promec Fittings: innesti rapidi, raccordi, tubi flessibili, collettori specifici per il mondo del condizionamento degli stampi iniezione

Plasteel Group was born thanks to the passion for the pursuit of excellence in order to satisfy every single customer's need in the best way.

Ranco: standard parts and guiding elements for injection moulds and die sets, self-lubrificating and engineered components, customezed parts.

iHR: manufacturing, sale and servicing of injection systems and control units for plastic injection moulds, precision mechanics machining.

Tecnostar Group: European Series mould bases, mechanical tools.

Technology & Solutions: laser machines and welding accessories, cutting, hardening, cladding, engraving and marking.

Promec Fittings: hydraulic quick couplings, fittings, flexible hoses, manifolds, thermoregulation technology for moulds and injection machines.

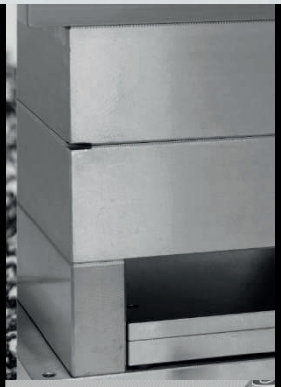

Promec
FITTINGS

Nel 2018 è nata **Promec Fittings**, ultimo progetto del gruppo Plasteel

Promec è specializzata nella fornitura di componenti per connessioni di aria, acqua, acqua e additivi, olio a bassa pressione ed olio ad alta pressione (oleodinamica).

Raccordi, innesti rapidi dei più svariati standard di uso comune, tubi flessibili per temperature da 60 a 260°C, distributori e multi-connessione.

Specializzazione basata su oltre vent'anni di esperienza, ampiezza di gamma, possibilità di esecuzioni speciali e rapidi tempi di risposta e consegna sono i nostri punti di forza per la piena soddisfazione di tutti i soggetti coinvolti nella progettazione, costruzione ed utilizzo degli stampi e di molteplici applicazioni industriali

Promec is a specialized supplier of a wide range of components for low and high pressure quick couplings of the main Standards, fittings, flexible hoses, manifold, flow-regulators, thermoregulation, ball valves, and many other specific accessories. Applications with compressed air, water, pressurized water, mineral oil and diathermic oil. Temperature from +60 to +260°C; pressure up to 400 Bar.

Promec is a specialized supplier of a wide Fast delivery time, quality, competence based on over 25 years of experience in the fluid technology applied on injection moulds, pre-sale and after sale service, are our skills.

9 **PC1100-T**
STANDARD EUROPA TOP
EUROPEAN STANDARD TOP

PC1100-E 15
STD. EUROPA ECO
EUROPEAN STD. ECO

23 **PC1200**
STD. INTERNAZIONALE
INTERNATIONAL STDANDARD

PC1200-E 29
STD. INTERNAZIONALE ECO
INTERNATIONAL STD. ECO

39 **PC1300**
STD. FRANCESE
FRENCH STD.

PC1400 45
STD. FRANCESE FACCIA PIANA
FLAT FACE FRENCH STD.

49 **PC1500**
ST.D FRANCESE S. LEGGERA
LIGHT SERIES FRENCH STD.

PC1600 57
STANDARD ITALIANO
ITALIAN STANDARD

61 **PC1700**
STANDARD ITALIANO
ITALIAN STANDARD

PC1800 63
INNESTI PORTATE ELEVATE
HIGH FLOW COUPLINGS

65 **PC2900**
CAMLOCK

PH1230 69
INNESTI RAPIDI ISO16028
ISO16028 QUICK COUPLINGS

69 **PH1210**
INNESTI RAPIDI ISO7241-A
ISO7241-A QUICK COUPLINGS

PH1220 70
INNESTI RAPIDI ISO7241-B
ISO7241-B QUICK COUPLINGS

70 **PH1240**
INNESTI ALTA PRESSIONE
HIGH PRESSURE COUPLINGS

PH1225 71
ISO7241-B OTTONE
BRASS ISO7241-B

73 **PA1100**
OTTONE DOPPIO O-R
BRASS WITH DOUBLE O-R

PA1600 77
SUPER RAPIDI OTTINE
BRASS ULTRA RAPID

83 **PA1200**
SUPER RAPIDI INOX
INOX ULTRA RAPID

PA1300 87
INNESTI A CALZAMENTO
PUSH-IN COUPLINGS

PC1100-T

Innesti rapidi standard Europa, serie TOP, intercambiabili con altri marchi con la stessa denominazione o profilo. La serie TOP si contraddistingue per la qualità particolarmente elevata e la **possibilità di essere utilizzato con vapore ed acqua pressurizzata (opzionale).**
European Standard Quick couplings, TOP series. Fully interchangeable with other brands with the same plug profile. The TOP line is our Best Quality solution. **It can be used with steam and pressurized water (optional).**

CARATTERISTICHE DI FUNZIONAMENTO – TECHNICAL FEATURES

Range di temperatura di esercizio con guarnizioni standard FKM:
Acqua -5\+150°C; olio diatermico -20°C / +200°C
Range di temperatura di esercizio con guarnizioni FKM ad Alte Prestazioni:
Acqua-Vapore -5\+180°C; olio diatermico -20°C / +220°C
Pressione max. di esercizio: 15 Bar

Working temperature range with standard FKM seals:
water -5°\+150°C; air and diathermic oil -5\+200°C
Working temperature range with optional High Performances FKM seals:
water-steam -5°\+180°C; air and diathermic oil -5\+220°C
Max. working pressure: 15 Bar

Diametri e passaggio flusso:
Size and flow size:

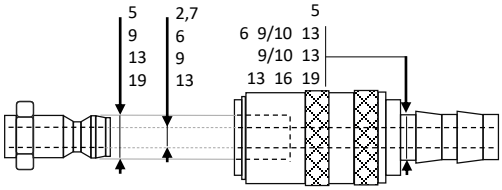

CARATTERISTICHE COSTRUTTIVE – CONSTRUCTION FEATURES

Corpo – Socket Body	Ottone – Brass
Ghiera – Sleeve	Ottone – Brass (nichelato per versione senza valvola /Nickel plated for version without shut-off)
Valvola – Valve	Ottone – Brass
Molle – Springs	Acciaio Inox – Stainless Steel
Sfere – Balls	Acciaio Inox – Stainless Steel
Nipplo – Nipple	Ottone – Brass
O-Rings	FKM

OPTIONALS

O-Rings FKM (Standard) V
O-Rings FKMH – Alte prestazioni\High Performances H

Flusso libero – without valve X
Con valvola di ritegno – Shut-off Valve Y

Corpo in ottone – Brass Body (Standard) B
Corpo Acciaio Inox – Stainless steel body S

© LÜDECKE Patented

PC1111-09-10-BYNV-T — Specifica della serie «TOP» «TOP» series specification

Bloccaggio di sicurezza della ghiera
Sleeve safe-lock L

Bloccaggio di sicurezza TempSecure®
TempSecure® Sleeve safe-lock T

Senza bloccaggio
no safe-lock N

PC1101 INNESTO RAPIDO CON PORTA-GOMMA EASY-LOCK
EASY-LOCK HOSE STEM SOCKET

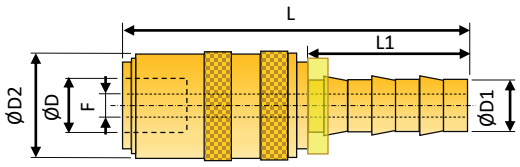

Codice-Code	misura size	D	D1	D2	F	L	L1
Senza valvola - without valve							
PC1101-09-06-BXNV-T	9	9	6,3	17	5	58,5	28
PC1101-09-10-BXNV-T	9	9	9,5	17	6	58,5	28
PC1101-13-10-BXNV-T	13	13	9,5	22	7	36,5	28
PC1101-13-13-BXNV-T	13	13	12,7	22	9	36,5	28
PC1101-19-16-BXNV-T	19	19	16	31	13	96	38
PC1101-19-19-BXNV-T	19	19	19	31	13	96	38
Con valvola - with valve							
PC1101-09-06-BYNV-T	9	9	6,3	17	5	58,5	28
PC1101-09-10-BYNV-T	9	9	9,5	17	6	58,5	28
PC1101-13-10-BYNV-T	9	9	9,5	22	7	36,5	28
PC1101-13-13-BYNV-T	13	13	12,7	22	9	36,5	28
PC1101-19-16-BYNV-T	19	19	16	31	13	96	38
PC1101-19-19-BYNV-T	19	19	19	31	13	96	38

PC1105 INNESTO RAPIDO CON PORTA-GOMMA EASY-LOCK 45°
45° EASY-LOCK HOSE STEM SOCKET

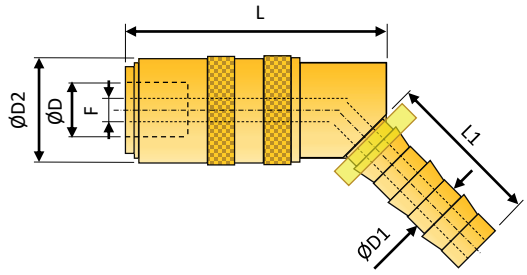

Codice-Code	misura size	D	D1	D2	F	L	L1
Senza valvola - without valve							
PC1105-09-06-BXNV-T	9	9	6,3	17	5	42,5	33
PC1105-09-10-BXNV-T	9	9	9,5	17	6	42,5	33
PC1105-13-10-BXNV-T	13	13	9,5	22	7	51	33
PC1105-13-13-BXNV-T	13	13	12,7	22	9	51	33
PC1105-19-16-BXNV-T	19	19	16	31	13	82	38
Con valvola - with valve							
PC1105-09-06-BYNV-T	9	9	6,3	17	5	42,5	33
PC1105-09-10-BYNV-T	9	9	9,5	17	6	42,5	33
PC1105-13-10-BYNV-T	13	13	9,5	22	7	51	33
PC1105-13-13-BYNV-T	13	13	12,7	22	10	51	33
PC1105-19-16-BYNV-T	19	19	16	31	13	82	38

PC1109 INNESTO RAPIDO CON PORTA-GOMMA EASY-LOCK 90°
90° EASY-LOCK HOSE STEM SOCKET

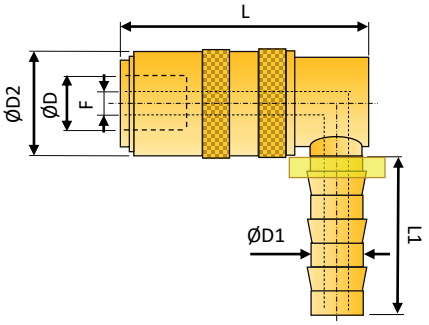

Codice-Code	misura size	D	D1	D2	F	L	L1
Senza valvola - without valve							
PC1109-09-06-BXNV-T	9	9	6,3	17	5	42,5	33
PC1109-09-10-BXNV-T	9	9	9,5	17	6	42,5	33
PC1109-13-10-BXNV-T	13	13	9,5	22	7	51	33
PC1109-13-13-BXNV-T	13	13	12,7	22	9	51	33
PC1109-19-16-BXNV-T	19	19	16	31	13	82	38
Con valvola - with valve							
PC1109-09-06-BYNV-T	9	9	6,3	17	5	42,5	33
PC1109-09-10-BYNV-T	9	9	9,5	17	6	42,5	33
PC1109-13-10-BYNV-T	13	13	9,5	22	7	51	33
PC1109-13-13-BYNV-T	13	13	12,7	22	10	51	33
PC1109-19-16-BYNV-T	19	19	16	31	13	82	38

PC1103 INNESTO RAPIDO CON PORTA-GOMMA STANDARD
STANDARD HOSE STEM SOCKET

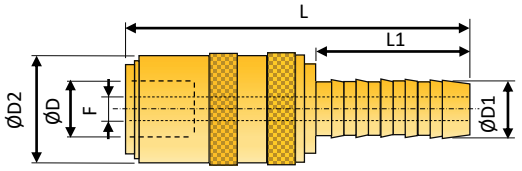

Codice-Code	misura size	D	D1	D2	F	L	L1
Senza valvola - without valve							
PC1103-05-05-BXNV-T	5	5	5	10	3,5	35	13,5
PC1103-09-06-BXNV-T	9	9	6	17	5	53	22,5
PC1103-09-09-BXNV-T	9	9	9	17	6	53	22,5
PC1103-09-13-BXNV-T	9	9	13	17	6	53	25
PC1103-13-09-BXNV-T	13	9	9	22	7	61,5	25
PC1103-13-13-BXNV-T	13	13	13	22	9	61,5	25
PC1103-19-13-BXNV-T	19	19	13	31	9	83	25
PC1103-19-19-BXNV-T	19	19	19	31	13	92	34
Con valvola - with valve							
PC1103-05-05-BYNV-T	5	5	5	10	3,5	35	13,5
PC1103-09-06-BYNV-T	9	9	6	17	5	53	22,5
PC1103-09-09-BYNV-T	9	9	9	17	6	53	22,5
PC1103-09-13-BYNV-T	9	9	13	17	6	53	25
PC1103-13-09-BYNV-T	9	9	9	17	7	61,5	25
PC1103-13-13-BYNV-T	13	13	13	22	9	61,5	25
PC1103-19-13-BYNV-T	19	19	13	31	9	83	25
PC1103-19-19-BYNV-T	19	19	19	31	13	92	34

PC1107 INNESTO RAPIDO CON PORTA-GOMMA STANDARD 45°
45° STANDARD HOSE STEM SOCKET

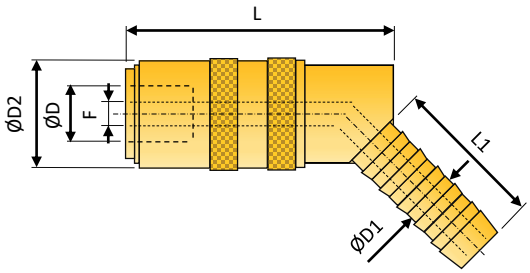

Codice-Code	misura size	D	D1	D2	F	L	L1
Senza valvola - without valve							
PC1107-05-05-BXNV-T	5	5	5	10	3,5	41	13,5
PC1107-09-06-BXNV-T	9	9	6	17	5	42,5	25,5
PC1107-09-09-BXNV-T	9	9	9	17	6	42,5	25,5
PC1107-13-09-BXNV-T	13	13	9	22	7	51	30
PC1107-13-13-BXNV-T	13	13	13	22	9	51	30
PC1107-19-19-BXNV-T	19	19	19	31	13	78	36
Con valvola - with valve							
PC1107-05-05-BYNV-T	5	5	5	10	3,5	41	13,5
PC1107-09-06-BYNV-T	9	9	6	17	5	42,5	25,5
PC1107-09-09-BYNV-T	9	9	9	17	6	42,5	25,5
PC1107-13-09-BYNV-T	13	13	9	22	7	51	30
PC1107-13-13-BYNV-T	13	13	13	22	9	51	30
PC1107-19-19-BYNV-T	19	19	19	31	13	78	36

PC1111 INNESTO RAPIDO CON PORTA-GOMMA STANDARD 90°
90° STANDARD HOSE STEM SOCKET

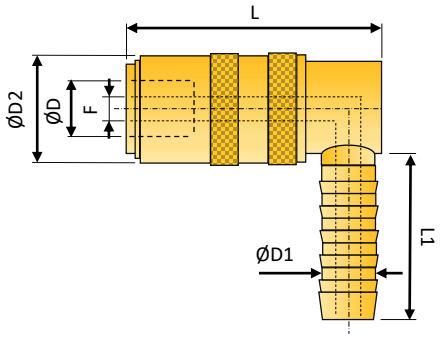

Codice-Code	misura size	D	D1	D2	F	L	L1
Senza valvola - without valve							
PC1111-05-05-BXNV-T	5	5	5	10	3,5	41	13,5
PC1111-09-06-BXNV-T	9	9	6	17	5	42,5	25,5
PC1111-09-09-BXNV-T	9	9	9	17	6	42,5	25,5
PC1111-13-09-BXNV-T	13	13	9	22	7	51	30
PC1111-13-13-BXNV-T	13	13	13	22	9	51	30
PC1111-19-19-BXNV-T	19	19	19	31	13	78	34
Con valvola - with valve							
PC1111-05-05-BYNV-T	5	5	5	10	3,5	41	13,5
PC1111-09-06-BYNV-T	9	9	6	17	5	42,5	25,5
PC1111-09-09-BYNV-T	9	9	9	17	6	42,5	25,5
PC1111-13-13-BYNV-T	13	13	9	22	7	51	30
PC1111-13-09-BYNV-T	13	13	13	22	9	51	30
PC1111-19-19-BYNV-T	19	19	19	31	13	78	34

PC1113 INNESTO RAPIDO CON FILETTO MASCHIO BSPP
BSPP MALE THREAD SOCKET

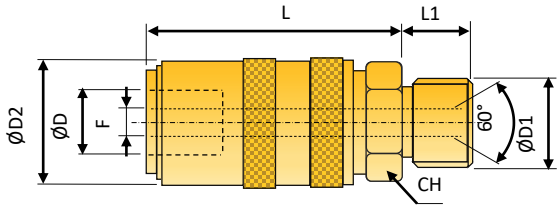

Cono interno DIN 3863
inner cone DIN3863

	Codice-Code	misura size	D	D1	D2	F	L	L1	CH
	Senza valvola - without valve								
stock	PC1113-09-G014-BXNV-T	9	9	G 1/4"	17	6	39	9	17
	PC1113-09-G038-BXNV-T	9	9	G 3/8"	17	6	39	9	19
	PC1113-09-M010-BXNV-T	9	9	M10x1	17	6	39	7	17
	PC1113-09-M014-BXNV-T	9	9	M14x1,5	17	6	39	9	17
	PC1113-09-M016-BXNV-T	9	9	M16x1,5	17	6	39	9	19
	PC1113-13-G014-BXNV-T	13	13	G 1/4"	22	9	43	9	22
stock	PC1113-13-G038-BXNV-T	13	13	G 3/8"	22	9	43	9	22
	PC1113-13-G012-BXNV-T	13	13	G 1/2"	22	9	43	10	22
	PC1113-13-M014-BXNV-T	13	13	M14x1,5	22	9	45	11	22
	PC1113-13-M016-BXNV-T	13	13	M16x1,5	22	9	43	9	24
	PC1113-19-G012-BXNV-T	19	19	G 1/2"	31	13	62	12	30
	PC1113-19-G034-BXNV-T	19	19	G 3/4"	31	13	62	16	30
	PC1113-19-MG0-BXNV-T	19	19	M24x1,5	31	13	62	16	30
	Con valvola - with valve								
stock	PC1113-09-G014-BYNV-T	9	9	G 1/4"	17	6	39	9	17
	PC1113-09-G038-BYNV-T	9	9	G 3/8"	17	6	39	9	19
	PC1113-09-M010-BYNV-T	9	9	M10x1	17	6	39	7	17
	PC1113-09-M014-BYNV-T	9	9	M14x1,5	17	6	39	9	17
	PC1113-09-M016-BYNV-T	9	9	M16x1,5	17	6	39	9	19
	PC1113-13-G014-BYNV-T	13	13	G 1/4"	22	9	43	9	22
stock	PC1113-13-G038-BYNV-T	13	13	G 3/8"	22	9	43	9	22
	PC1113-13-G012-BYNV-T	13	13	G 1/2"	22	9	43	10	22
	PC1113-13-M014-BYNV-T	13	13	M14x1,5	22	9	45	11	22
	PC1113-13-M016-BYNV-T	13	13	M16x1,5	22	9	43	9	24
	PC1113-19-G012-BYNV-T	19	19	G 1/2"	31	13	62	12	30
	PC1113-19-G034-BYNV-T	19	19	G 3/4"	31	13	62	12	30
	PC1113-19-M024-BYNV-T	19	19	M24x1,5	31	13	62	12	30

APPLICAZIONI CON **ACQUA PRESSURIZZATA O VAPORE**
APPLICATION WITH **PRESSURIZED WATER OR STEAM**

© LÜDECKE
Patented

S

TH

PER APPLICAZIONI CON ACQUA PRESSURIZZATA O VAPORE SOSTITIURE «NV» CON «TH» NEL CODICE. L'INNESTO SARA' DOTATO DI GUARNIZIONI SPECIALI E SISTEMA DI BLOCCAGGIO DI SICUREZZA. FORNIBILE ANCHE IN ACCIAIO INOX SOSTITUENDO «B» CON «S»

FOR APPLICATION WITH PRESSURIZED WATER OR STEAM REPLACE THE CODE SECTION «NV» WITH «TH». IN THIS CASE THE SOCKET WILL BE EQUIPPED WITH SPECIAL SEALS AND A SAFE-LOCK SYSTEM. AVAILABLE ALSO IN STAINLESS STEEL BY REPLACING CODE SECTION «B» WITH «S»

PC1119 INNESTO RAPIDO CON FILETTO FEMMINA BSPP - BSPP FEMALE THREAD SOCKET

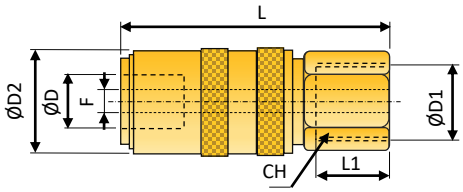

Codice-Code	misura size	D	D1	D2	F	L	L1	CH
Senza valvola - without valve								
PC1119-09-G014-BXNV-T	9	9	G 1/4"	17	6	41,5	9	17
PC1119-09-G038-BXNV-T	9	9	G 3/8"	17	6	42	9	21
PC1119-09-M010-BXNV-T	9	9	M10x1	17	6	41,5	9	17
PC1119-09-M014-BXNV-T	9	9	M14x1,5	17	6	41,5	9	17
PC1119-13-G014-BXNV-T	13	13	G 1/4"	22	9	44,5	9	22
PC1119-13-G038-BXNV-T	13	13	G 3/8"	22	9	46	9	17
PC1119-13-G012-BXNV-T	13	13	G 1/2"	22	9	49	12	24
PC1119-19-G034-BXNV-T	19	19	G 3/4"	31	13	78	16	33
Con valvola - with valve								
PC1119-09-G014-BYNV-T	9	9	G 1/4"	17	6	41,5	9	17
PC1119-09-G038-BYNV-T	9	9	G 3/8"	17	6	42	9	21
PC1119-09-M010-BYNV-T	9	9	M10x1	17	6	41,5	9	17
PC1119-09-M014-BYNV-T	9	9	M14x1,5	17	6	41,5	9	17
PC1119-13-G014-BYNV-T	13	13	G 1/4"	22	9	44,5	9	17
PC1119-13-G038-BYNV-T	13	13	G 3/8"	22	9	46	9	22
PC1119-13-G012-BYNV-T	13	13	G 1/2"	22	9	49	12	24
PC1119-19-G034-BYNV-T	19	19	G 3/4"	31	13	78	16	33

PC1140 NIPPLO PROLUNGATO FILETTATO - BSPP EXTENDED STRAIGHT BSPP THREAD PLUG

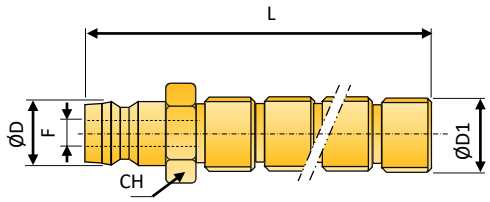

	Codice-Code	misura size	CH	D	D1	D2	F	L	L1
stock	PC1140-09-G018-B-100-T	9	11	9	G1/	-	6	100	-
stock	PC1140-09-G014-B-100-T	9	14	9	G1/	-	6	100	-
	PC1140-09-G038-B-100-T	9	17	9	G3/	-	6	100	-
stock	PC1140-13-G014-B-100-T	13	14	13	G1/	-	9	100	-
	PC1140-13-G038-B-100-T	13	17	13	G3/	-	9	100	-

PC1116 NIPPLO FILETTO MASCHIO BSPP ESAGONO INTERNO - BSPP MALE THREAD INT. HEXAGON PLUG

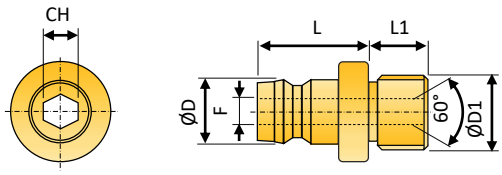

Cono interno DIN 3863
inner cone DIN3863

Codice-Code	misura size	CH	D	D1	D2	F	L	L1
Senza valvola - without valve								
PC1116-09-G018-B-T	9	5	9	G1/	-	6	17	7
PC1116-09-G014-B-T	9	5	9	G1/	-	6	17	9
PC1116-09-M010-B-T	9	5	9	M10	-	6	17	7
PC1116-09-M014-B-T	9	5	9	M14	-	6	17	9
PC1116-13-G014-B-T	13	8	13	G1/	-	9	26	9
PC1116-13-M014-B-T	13	8	13	M14	-	9	26	9

PC1114 NIPPLO FILETTO MASCHIO BSPP OTTONE NICHELATO
NIKEL PLATED BRASS PLUG WITH BSPP MALE THREAD

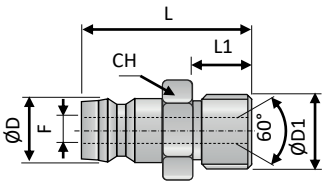

Cono interno DIN 3863
inner cone DIN3863

	Codice-Code	misura size	D	D1	F	L	L1	CH
	Senza valvola - without valve							
stock	PC1114-09-G018-B-T	9	9	G1/8"	6	24	7	11
stock	PC1114-09-G014-B-T	9	9	G1/4"	6	26	9	15
	PC1114-09-G038-B-T	9	9	G3/8"	6	27	9	17
	PC1114-13-G018-B-T	13	13	G1/8"	6	24	7	15
stock	PC1114-13-G014-B-T	13	13	G1/4"	9	26	9	15
	PC1114-13-G038-B-T	13	13	G3/8"	9	26	9	17
	PC1114-13-G012-B-T	13	13	G1/2"	9	31	12	22
	PC1114-13-G034-B-T	13	13	G3/4"	9	35	16	27
	PC1114-19-G012-B-T	19	19	G1/2"	13	47	12	22
	PC1114-19-G034-B-T	19	19	G3/4"	13	51	16	27
	Con valvola - with valve							
	PC1114-09-G018-BYV-T	9	9	G1/8"	6	36	8	15
	PC1114-09-G014-BYV-T	9	9	G1/4"	6	29	12	15
	PC1114-09-G038-BYV-T	9	9	G3/8"	6	30	12	17
	PC1114-13-G014-BYV-T	13	13	G1/4"	6	30	11	15
	PC1114-13-G038-BYV-T	13	13	G3/8"	9	31	12	17
	PC1114-13-G012-BYV-T	13	13	G1/2"	9	31	12	22
	PC1114-19-G012-BYV-T	19	19	G1/2"	13	47	12	22
	PC1114-19-G034-BYV-T	19	19	G3/4"	13	51	16	27

Per Inox sostituire «B» con «S» - For Stainless steel replace «B» with «S»

PC1114 NIPPLO FILETTO MASCHIO METRICO OTTONE
YELLOW BRASS PLUG WITH METRIC MALE THREAD

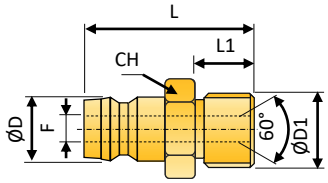

Cono interno DIN 3863
inner cone DIN3863

Codice-Code	misura size	D	D1	F	L	L1	CH
Senza valvola - without valve							
PC1114-05-M005-B-T	5	5	M5x0,5	3	18	5	7
PC1114-05-M008-B-T	5	5	M8x0,75	3	20	7	9
PC1114-09-M008-B-T	9	9	M8x0,75	5	24	7	11
PC1114-09-M010-B-T	9	9	M10x1	6	24	7	11
PC1114-09-M014-B-T	9	9	M14x1,5	6	26	9	15
PC1114-09-M016-B-T	9	9	M16x1,5	6	26	9	17
PC1114-13-M010-B-T	13	13	M10x1	7	24	7	15
PC1114-13-M014-B-T	13	13	M14x1,5	9	26	9	15
PC1114-13-M016-B-T	13	13	M16x1,5	9	26	9	17
PC1114-19-M024-B-T	19	19	M24x1,5	13	51	16	27
Con valvola - with valve							
PC1114-05-M005-BYV-T	5	5	M5x0,5	3	28	5	9
PC1114-05-M008-BYV-T	5	5	M8x0,75	3	30	7	9
PC1114-09-M014-BYV-T	9	9	M14x1,5	6	29	12	15
PC1114-13-M014-BYV-T	13	13	M14x1,5	9	30	11	15
PC1114-13-M016-BYV-T	13	13	M16x1,5	9	31	12	17
PC1114-19-M024-BYV-T	19	19	M24x1,5	13	51	16	27

Per Inox sostituire «B» con «S» - For Stainless steel replace «B» with «S»

PC1100-E

Innesti rapidi standard Europa, serie ECO, intercambiabili con altri marchi con la stessa denominazione o profilo. La serie ECO si contraddistingue per il prezzo particolarmente vantaggioso.

European Standard Quick couplings, ECO series. Fully interchangeable with other brands with the same plug profile. The ECO line is our Best Price solution.

CARATTERISTICHE DI FUNZIONAMENTO – TECHNICAL FEATURES

Range di temperatura di esercizio:	acqua -5\+140°C con guarnizioni standard FKM olio diatermico -20°C / +180°C con guarnizioni standard FKM
Pressione max. di esercizio:	15 Bar
Working temperature range:	water -5°\+140°C with FKM standard seals diathermic oil -5\+180°C with FKM standard seals
Max. working pressure:	15 Bar

Diametri e passaggio flusso:
Size and flow size:

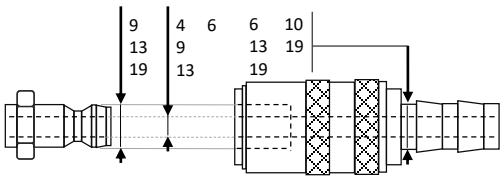

CARATTERISTICHE COSTRUTTIVE – CONSTRUCTION FEATURES

Corpo – Socket Body	Ottone – Brass
Ghiera – Sleeve	Ottone – Brass
Valvola – Valve	Ottone – Brass
Molle – Springs	Acciaio Inox – Stainless Steel
Sfere – Balls	Acciaio Inox – Stainless Steel
Nipplo – Nipple	Ottone – Brass
O-Rings	FKM (Viton®)

OPTIONALS

Flusso libero – without valve X
Con valvola di ritegno – Shut-off Valve Y

Corpo in ottone – Brass Body (Standard) B
Corpo Acciaio Inox – Stainless steel body S

PC1111-09-10-BYNV-E

Specifica della serie «ECO»
«ECO» series specification

Bloccaggio di sicurezza della ghiera – Sleeve safe-lock L

Senza bloccaggio
no safe-lock N

PC1101 INNESTO RAPIDO CON PORTA-GOMMA EASY-LOCK
EASY-LOCK HOSE STEM SOCKET

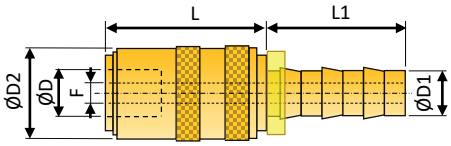

	Codice-Code	misura size	D	D1	D2	F	L	L1
	Senza valvola - without valve							
stock	PC1101-09-10-BXNV-E	9	9	9,5	18	6	30	24
	PC1101-13-10-BXNV-E	13	13	9,5	24	7,5	36	28
stock	PC1101-13-13-BXNV-E	13	13	12,7	24	10	36	28
	PC1101-19-16-BXNV-E	19	19	16	32	12	46	38
	PC1101-19-19-BXNV-E	19	19	19	32	12	46	38
	Con valvola - with valve							
stock	PC1101-09-10-BYNV-E	9	9	9,5	18	6	30	24
	PC1101-13-10-BYNV-E	13	13	9,5	24	7,5	36	28
stock	PC1101-13-13-BYNV-E	13	13	12,7	24	10	36	28
	PC1101-19-16-BYNV-E	19	19	16	32	12	46	38
	PC1101-19-19-BYNV-E	19	19	19	32	12	46	38

PC1105 INNESTO RAPIDO CON PORTA-GOMMA EASY-LOCK 45°
45° EASY-LOCK HOSE STEM SOCKET

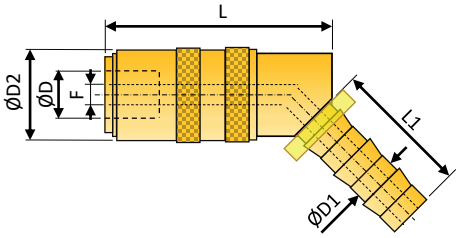

Codice-Code	misura size	D	D1	D2	F	L	L1
Senza valvola - without valve							
PC1105-09-10-BXNV-E	9	9	9,5	18	6	42	26
PC1105-13-10-BXNV-E	13	13	9,5	24	7,5	52	29
PC1105-13-13-BXNV-E	13	13	12,7	24	10	52	29
PC1105-19-16-BXNV-E	19	19	16	32	12	84	38
PC1105-19-19-BXNV-E	19	19	19	32	12	84	38
Con valvola - with valve							
PC1105-09-10-BYNV-E	9	9	9,5	18	6	42	26
PC1105-13-10-BYNV-E	13	13	9,5	24	7,5	52	29
PC1105-13-13-BYNV-E	13	13	12,7	24	10	52	29
PC1105-19-16-BYNV-E	19	19	16	32	12	84	38
PC1105-19-19-BYNV-E	19	19	19	32	12	84	38

PC1109 INNESTO RAPIDO CON PORTA-GOMMA EASY-LOCK 90°
90° EASY-LOCK HOSE STEM SOCKET

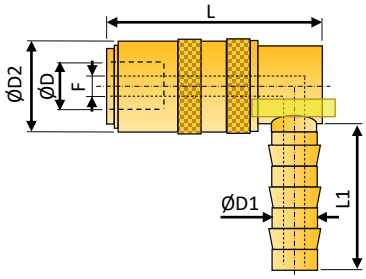

	Codice-Code	misura size	D	D1	D2	F	L	L1
	Senza valvola - without valve							
stock	PC1109-09-10-BXNV-E	9	9	9,5	18	6	42	26
	PC1109-13-10-BXNV-E	13	13	9,5	24	7,5	52	29
stock	PC1109-13-13-BXNV-E	13	13	12,7	24	10	52	29
	PC1109-19-16-BXNV-E	19	19	16	32	12	84	38
	PC1109-19-19-BXNV-E	19	19	19	32	12	84	38
	Con valvola - with valve							
stock	PC1109-09-10-BYNV-E	9	9	9,5	18	6	42	26
	PC1109-13-10-BYNV-E	13	13	9,5	24	7,5	52	29
stock	PC1109-13-13-BYNV-E	13	13	12,7	24	10	52	29
	PC1109-19-16-BYNV-E	19	19	16	32	12	84	38
	PC1109-19-19-BYNV-E	19	19	19	32	12	84	38

PC1103 INNESTO RAPIDO CON PORTA-GOMMA STANDARD
STANDARD HOSE STEM SOCKET

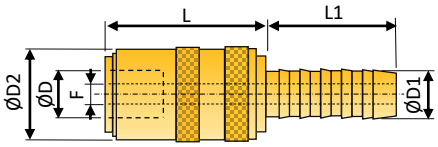

	Codice-Code	misura size	D	D1	D2	F	L	L1
	Senza valvola - without valve							
	PC1103-09-06-BXNV-E	9	9	6	18	4,5	30	18
stock	PC1103-09-10-BXNV-E	9	9	10	18	6	30	18
	PC1103-13-10-BXNV-E	13	13	10	24	7,5	37	28
stock	PC1103-13-13-BXNV-E	13	13	13	24	10	37	36
	PC1103-19-16-BXNV-E	19	19	16	32	12	48	32
	PC1103-19-19-BXNV-E	19	19	19	32	12	48	32
	Con valvola - with valve							
	PC1103-09-06-BYNV-E	9	9	6	18	4,5	30	18
stock	PC1103-09-10-BYNV-E	9	9	10	18	6	30	18
	PC1103-13-10-BYNV-E	13	13	10	24	7,5	37	28
stock	PC1103-13-13-BYNV-E	13	13	13	24	10	37	36
	PC1103-19-16-BYNV-E	19	19	16	32	12	48	32
	PC1103-19-19-BYNV-E	19	19	19	32	12	48	32

PC1107 INNESTO RAPIDO CON PORTA-GOMMA STANDARD 45°
45° STANDARD HOSE STEM SOCKET

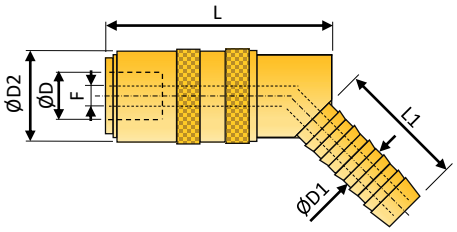

Codice-Code	misura size	D	D1	D2	F	L	L1
PC1107-09-06-BXNV-E	9	9	6	18	4,5	43	26
PC1107-09-10-BXNV-E	9	9	10	18	6	43	26
PC1107-13-10-BXNV-E	13	13	10	24	7,5	51	33
PC1107-13-13-BXNV-E	13	13	13	24	10	51	33
PC1107-19-16-BXNV-E	19	19	16	32	12	78	36
PC1107-19-19-BXNV-E	19	19	19	32	12	78	36
Con valvola - with valve							
PC1107-09-06-BYNV-E	9	9	6	18	4,5	43	26
PC1107-09-10-BYNV-E	9	9	10	18	6	43	26
PC1107-13-10-BYNV-E	13	13	10	24	7,5	51	33
PC1107-13-13-BYNV-E	13	13	13	24	10	51	33
PC1107-19-16-BYNV-E	19	19	16	32	12	78	36
PC1107-19-19-BYNV-E	19	19	19	32	12	78	36

PC1111 INNESTO RAPIDO CON PORTA-GOMMA STANDARD 90°
WITH 90° STANDARD HOSE STEM SOCKET

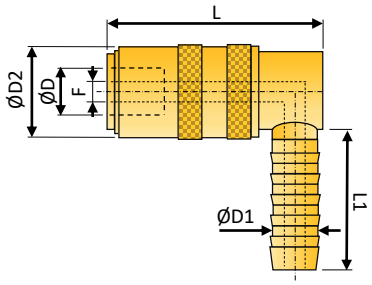

	Codice-Code	misura size	D	D1	D2	F	L	L1
	Con valvola - with valve							
stock	PC1111-09-10-BYNV-E	9	9	10	18	6	42	26
	PC1111-13-10-BYNV-E	13	13	10	24	7,5	52	26
stock	PC1111-13-13-BYNV-E	13	13	13	24	10	52	26
	PC1111-19-16-BYNV-E	19	19	19	32	12	78	32
	PC1111-19-19-BYNV-E	19	19	19	32	12	78	32
	Senza valvola - without valve							
stock	PC1111-09-10-BXNV-E	9	9	10	18	6	42	26
	PC1111-13-10-BXNV-E	13	13	10	24	7,5	52	26
stock	PC1111-13-13-BXNV-E	13	13	13	24	10	52	26
	PC1111-19-16-BXNV-E	19	19	19	32	12	78	32
	PC1111-19-19-BXNV-E	19	19	19	32	12	78	32

PC1113 INNESTO RAPIDO CON FILETTO MASCHIO BSPP
BSPP MALE THREAD SOCKET

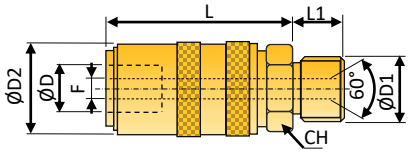

Cono interno DIN 3863
inner cone DIN3863

Codice-Code	misura size	D	F	D1	D2	L	L1	CH
Senza valvola - without valve								
PC1113-09-G014-BXNV-E	9	9	6	G 1/4"	18	38,5	9	17
PC1113-09-G038-BXNV-E	9	9	6	G 3/8"	18	38,5	9	17
PC1113-09-M010-BXNV-E	9	9	6	M10x1	18	38,5	9	17
PC1113-09-M014-BXNV-E	9	9	6	M14x1,5	18	38,5	9	17
PC1113-13-G014-BXNV-E	13	13	9	G 1/4"	24	42	9	21
PC1113-13-G038-BXNV-E	13	13	9	G 3/8"	24	42	9	21
PC1113-13-G012-BXNV-E	13	13	9	G 1/2"	24	42	9	21
PC1113-13-M016-BXNV-E	13	13	9	M16x1,5	24	42	10	21
PC1113-19-G012-BXNV-E	19	19	14	G 1/2"	32	59	12	30
PC1113-19-G034-BXNV-E	19	19	14	G 3/4"	32	59	16	30
PC1113-19-M024-BXNV-E	19	19	14	M24x1,5	32	59	16	30
Con valvola - with valve								
PC1113-09-G014-BYNV-E	9	9	6	G 1/4"	18	38,5	9	17
PC1113-09-G038-BYNV-E	9	9	6	G 3/8"	18	38,5	9	17
PC1113-09-M010-BYNV-E	9	9	6	M10x1	18	38,5	9	17
PC1113-09-M014-BYNV-E	9	9	6	M14x1,5	18	38,5	9	17
PC1113-13-G014-BYNV-E	13	13	9	G 1/4"	24	42	9	21
PC1113-13-G038-BYNV-E	13	13	9	G 3/8"	24	42	9	21
PC1113-13-G012-BYNV-E	13	13	9	G 1/2"	24	42	9	21
PC1113-13-M016-BYNV-E	13	13	9	M16x1,5	24	42	10	21
PC1113-19-G012-BYNV-E	19	19	14	G 1/2"	32	59	12	30
PC1113-19-G034-BYNV-E	19	19	14	G 3/4"	32	59	16	30
PC1113-19-M024-BYNV-E	19	19	14	M24x1,5	32	59	16	30

PC1115 INNESTO RAPIDO CON FILETTO MASCHIO BSPP 45°
BSPP 45° MALE THREAD SOCKET

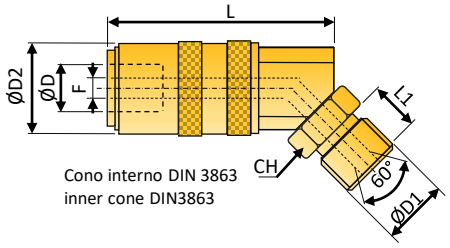

Cono interno DIN 3863
inner cone DIN3863

Codice-Code	misura size	D	F	D1	D2	L	L1	CH
Senza valvola - without valve								
PC1115-09-G014-BXNV-E	9	9	6	G 1/4"	18	38,5	9	14
PC1115-09-G038-BXNV-E	9	9	6	G 3/8"	18	38,5	9	17
PC1115-09-M014-BXNV-E	9	9	6	M14x1,5	18	38,5	9	17
PC1115-13-G014-BXNV-E	13	13	9	G 1/4"	24	42	9	21
PC1115-13-G038-BXNV-E	13	13	9	G 3/8"	24	42	9	21
PC1115-13-G012-BXNV-E	13	13	9	G 1/2"	24	42	9	21
PC1115-13-M016-BXNV-E	13	13	9	M16x1,5	24	42	10	21
PC1115-19-G012-BXNV-E	19	19	14	G 1/2"	32	59	12	30
PC1115-19-M024-BXNV-E	19	19	14	M24x1,5	32	59	16	30
Con valvola - with valve								
PC1115-09-G014-BYNV-E	9	9	6	G 1/4"	18	38,5	9	14
PC1115-09-G038-BYNV-E	9	9	6	G 3/8"	18	38,5	9	17
PC1115-09-M014-BYNV-E	9	9	6	M14x1,5	18	38,5	9	17
PC1115-13-G014-BYNV-E	13	13	9	G 1/4"	24	42	9	21
PC1115-13-G038-BYNV-E	13	13	9	G 3/8"	24	42	9	21
PC1115-13-G012-BYNV-E	13	13	9	G 1/2"	24	42	9	21
PC1115-13-M016-BYNV-E	13	13	9	M16x1,5	24	42	10	21
PC1115-19-G012-BYNV-E	19	19	14	G 1/2"	32	59	12	30
PC1115-19-M024-BYNV-E	19	19	14	M24x1,5	32	59	16	30

PC1117 INNESTO RAPIDO CON FILETTO MASCHIO BSPP 90°
BSPP 90° MALE THREAD SOCKET

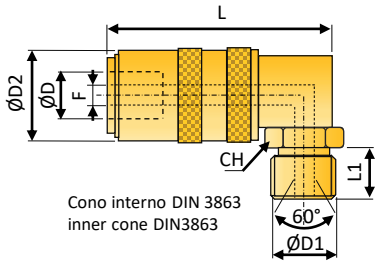

Codice-Code	misura size	CH	D	F	D1	D2	L	L1
Senza valvola - without valve								
PC1117-09-G014-BXNV-E	9	14	9	6	G 1/4"	18	38,5	9
PC1117-09-G038-BXNV-E	9	17	9	6	G 3/8"	18	38,5	9
PC1117-09-M014-BXNV-E	9	17	9	6	M14x1,5	18	38,5	9
PC1117-13-G014-BXNV-E	13	21	13	9	G 1/4"	24	42	9
PC1117-13-G038-BXNV-E	13	21	13	9	G 3/8"	24	42	9
PC1117-13-G012-BXNV-E	13	21	13	9	G 1/2"	24	42	9
PC1117-13-M016-BXNV-E	13	21	13	9	M16x1,5	24	42	10
PC1117-19-G012-BXNV-E	19	30	19	14	G 1/2"	32	59	12
PC1117-19-M024-BXNV-E	19	30	19	14	M24x1,5	32	59	16
Con valvola - with valve								
PC1117-09-G014-BYNV-E	9	14	9	6	G 1/4"	18	38,5	9
PC1117-09-G038-BYNV-E	9	17	9	6	G 3/8"	18	38,5	9
PC1117-09-M014-BYNV-E	9	17	9	6	M14x1,5	18	38,5	9
PC1117-13-G014-BYNV-E	13	21	13	9	G 1/4"	24	42	9
PC1117-13-G038-BYNV-E	13	21	13	9	G 3/8"	24	42	9
PC1117-13-G012-BYNV-E	13	21	13	9	G 1/2"	24	42	9
PC1117-13-M016-BYNV-E	13	21	13	9	M16x1,5	24	42	10
PC1117-19-G012-BYNV-E	19	30	19	14	G 1/2"	32	59	12
PC1117-19-M024-BYNV-E	19	30	19	14	M24x1,5	32	59	16

PC1119 INNESTO RAPIDO CON FILETTO FEMMINA BSPP
BSPP FEMALE THREAD SOCKET

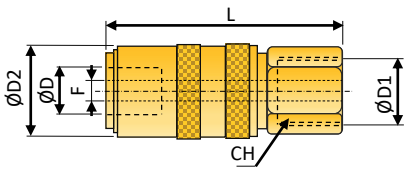

Codice-Code	misura size	CH	D	F	D1	D2	L	L1
Senza valvola - without valve								
PC1119-09-G014-BXNV-E	9	17	9	6	G 1/4"	18	47,5	-
PC1119-09-G038-BXNV-E	9	21	9	6	G 3/8"	18	47,5	-
PC1119-09-M010-BXNV-E	9	17	9	6	M10x1	18	47,5	-
PC1119-09-M014-BXNV-E	9	17	9	6	M14x1,5	18	47,5	-
PC1119-13-G014-BXNV-E	13	21	13	9	G 1/4"	24	52	-
PC1119-13-G038-BXNV-E	13	21	13	9	G 3/8"	24	52	-
PC1119-13-G012-BXNV-E	13	21	13	9	G 1/2"	24	52	-
PC1119-13-M016-BXNV-E	13	21	13	9	M16x1,5	24	52	-
PC1119-19-G034-BXNV-E	19	30	19	14	G 3/4"	32	72	-
PC1119-19-M024-BXNV-E	19	30	19	14	M24x1,5	32	72	-
Con valvola - with valve								
PC1119-09-G014-BYNV-E	9	17	9	6	G 1/4"	18	47,5	-
PC1119-09-G038-BYNV-E	9	21	9	6	G 3/8"	18	47,5	-
PC1119-09-M010-BYNV-E	9	17	9	6	M10x1	18	47,5	-
PC1119-09-M014-BYNV-E	9	17	9	6	M14x1,5	18	47,5	-
PC1119-13-G014-BYNV-E	13	21	13	9	G 1/4"	24	52	-
PC1119-13-G038-BYNV-E	13	21	13	9	G 3/8"	24	52	-
PC1119-13-G012-BYNV-E	13	21	13	9	G 1/2"	24	52	-
PC1119-13-M016-BYNV-E	13	21	13	9	M16x1,5	24	52	-
PC1119-19-G034-BYNV-E	19	30	19	14	G 3/4"	32	72	-
PC1119-19-M024-BYNV-E	19	30	19	14	M24x1,5	32	72	-

PC1125 ADATTATORE NIPPLO MASCHIO–FEMMINA INNESTO RAPIDO
MALE PLUG – FEMALE SOCKET ADAPTER

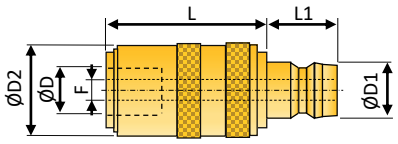

Codice-Code	misura size	D	D1	D2	F	L	L1
Senza valvola - without valve							
PC1125-09-13-BXNV-E	9	9	13	18	6	44	14,5
PC1125-13-13-BXNV-E	13	13	13	24	9	45	13
PC1125-13-09-BXNV-E	13	13	9	24	9	45	13
Con valvola - with valve							
PC1125-09-13-BYNV-E	9	9	13	18	6	44	15
PC1125-13-13-BYNV-E	13	13	13	24	9	45	13
PC1125-13-09-BYNV-E	13	13	9	24	9	45	13

PC1127 ADATTATORE NIPPLO MASCHIO INTERNAZ. – INNESTO FEMMINA EU
INTL. MALE PLUG – EU FEMALE SOCKET ADAPTER

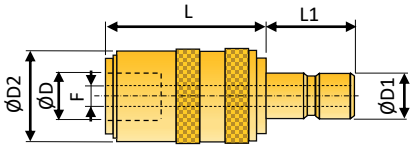

Codice-Code	misura size	D	D1	D2	F	L	L1
Senza valvola - without valve							
PC1127-09-09-BXNV-E	9	9	9	18	6	44	12
PC1127-13-13-BXNV-E	13	13	14	24	9	45	15
Con valvola - with valve							
PC1127-09-09-BYNV-E	9	9	9	18	6	44	12
PC1127-13-13-BYNV-E	13	13	14	24	9	45	15

PC1131 INNESTO RAPIDO PER PONTE – BRIDGE SOCKET

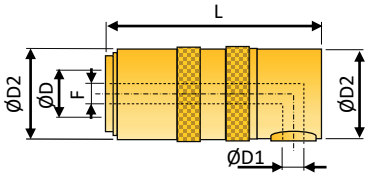

PC1190 TUBO LISCIO PER PONTE
STRAIGHT TUBE FOR BRIDGE

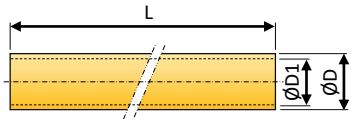

Codice-Code	misura size	D	D1	D2	F	L	L1
Senza valvola - without valve							
PC1131-09-08-BXNV-E	9	9	8	18	6	44	-
PC1131-13-10-BXNV-E	13	13	10	24	8	53	-
PC1131-19-14-BXNV-E	19	19	14	32	12	80	-
Con valvola - with valve							
PC1131-09-08-BYNV-E	9	9	8	18	6	44	-
PC1131-13-10-BYNV-E	13	13	10	24	8	53	-
PC1131-19-14-BYNV-E	19	19	14	32	12	80	-
PC1190-08-06-250-B-T	8	8	6	-	-	250	-
PC1190-08-06-500-B-T	8	8	6	-	-	500	-
PC1190-10-08-250-B-T	10	10	8	-	-	250	-
PC1190-10-08-500-B-T	10	10	8	-	-	500	-
PC1190-14-12-500-B-T	14	14	12	-	-	500	-

PC1146 NIPPLO ADATTATORE STD. EU CON STD. INTERNAZIONALE
STD. EU PLUG WITH INTL STD. PLUG ADAPTER

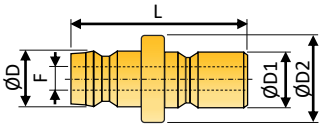

Codice-Code	misura size	CH	D	F	D1	D2	L
PC1146-09-09-B-E	9	-	9	6	9	13	29
PC1146-13-13-B-E	13	-	13	9	13	16	35

PC1102 NIPPLO CON PORTAGOMMA EASY-LOCK
EASY-LOCK HOSE STEM PLUG

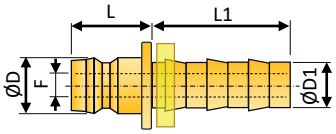

Codice-Code	misura size	CH	D	D1	F	L	L1	L2
Senza valvola - without valve								
PC1102-09-10-B-E	9	-	9	9,5	6	17	24	-
PC1102-09-13-B-E	9	-	9	12,7	9	21	24	-
PC1102-13-10-B-E	13	-	13	9,5	6	17	24	-
PC1102-13-13-B-E	13	-	13	12,7	9	17	28	-
PC1102-19-13-B-E	19	-	19	12,7	9	32	28	-
PC1102-19-19-B-E	19	-	19	19	13	39	31	-

PC1104 NIPPLO CON PORTAGOMMA STANDAR
STANDARD HOSE STEM PLUG

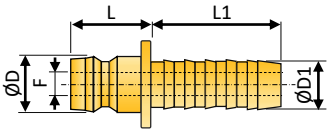

Codice-Code	misura size	CH	D	D1	F	L	L1	L2
Senza valvola - without valve								
PC1104-09-06-B-E	9	-	9	6	4	20	17	-
PC1104-09-09-B-E	9	-	9	9	6	20	17	-
PC1104-09-10-B-E	9	-	9	10	6	20	17	-
PC1104-09-13-B-E	9	-	9	13	6	20	17	-
PC1104-13-10-B-E	13	-	13	10	6	16	23	-
PC1104-13-13-B-E	13	-	13	13	9	16	23	-
PC1104-19-13-B-E	19	-	19	13	9	30	23	-
PC1104-19-19-B-E	19	-	19	19	13	35	27	-

PC1114 NIPPLO FILETTO MASCHIO BSPP
BSPP MALE THREAD PLUG

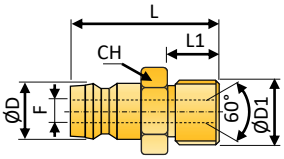

Cono interno DIN 3863
inner cone DIN3863

	Codice-Code	misura size	CH	D	D1	F	L	L1	L2
	Senza valvola - without valve								
stock	PC1114-09-G018-B-E	9	11	9	G1/8"	5	24	7	-
stock	PC1114-09-G014-B-E	9	14	9	G1/4"	6	26	9	-
	PC1114-09-G038-B-E	9	14	9	G3/8"	6	26	9	-
	PC1114-09-M008-B-E	9	11	9	M8x0,75	5	24	7	-
	PC1114-09-M010-B-E	9	11	9	M10x1	6	24	7	-
	PC1114-09-M014-B-E	9	14	9	M14x1,5	6	26	9	-
	PC1114-13-G018-B-E	13	14	13	G1/8"	5	24	7	-
stock	PC1114-13-G014-B-E	13	14	13	G1/4"	6	26	9	-
stock	PC1114-13-G038-B-E	13	17	13	G3/8"	9	26	9	-
stock	PC1114-13-G012-B-E	13	21	13	G1/2"	9	30	12	-
	PC1114-13-M010-B-E	13	14	13	M10x1	7	26	9	-
	PC1114-13-M014-B-E	13	14	13	M14x1,5	9	26	9	-
	PC1114-13-M016-B-E	13	17	13	M16x1,5	9	26	9	-
	PC1114-19-G012-B-E	19	22	19	G1/2"	13	47	12	-
	PC1114-19-G034-B-E	19	27	19	G3/4"	13	51	16	-
	PC1114-19-M024-B-E	19	27	19	M24x1,5	13	51	16	-
	Con valvola - with valve								
	PC1114-09-G014-BYV-E	9	14	9	G1/4"	6	26	9	-
	PC1114-09-G038-BYV-E	9	14	9	G3/8"	6	26	9	-
	PC1114-09-M014-BYV-E	9	14	9	M14x1,5	6	26	9	-
	PC1114-13-G014-BYV-E	13	14	13	G1/4"	6	30	12	-
	PC1114-13-G038-BYV-E	13	17	13	G3/8"	9	30	12	-
	PC1114-13-M014-BYV-E	13	14	13	M14x1,5	9	30	12	-
	PC1114-13-M016-BYV-E	13	17	13	M16x1,5	9	30	12	-
	PC1114-19-G012-BYV-E	19	22	19	G1/2"	13	51	16	-
	PC1114-19-G034-BYV-E	19	27	19	G3/4"	13	51	16	-
	PC1114-19-M024-BYV-E	19	27	19	M24x1,5	13	51	16	-

PC1114 NIPPLO FILETTO MASCHIO BSPP CON TEFLON
BSPP TAPERED MALE THREAD PLUG

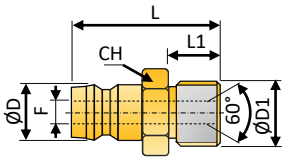

Codice-Code	misura size	CH	D	D1	F	L	L1	L2
Senza valvola - without valve								
PC1114-09-G018-B	9	11	9	G1/8"	5	24	7	-
PC1114-09-G014-B	9	14	9	G1/4"	6	26	9	-
PC1114-13-G014-B	13	14	13	G1/4"	6	26	9	-
PC1114-13-G038-B	13	17	13	G3/8"	9	26	9	-
PC1114-13-G012-B	13	21	13	G1/2"	9	30	12	-

PC1126 NIPPLO FILETTO MASCHIO BSPT 90°
BSPT 90° MALE THREAD PLUG

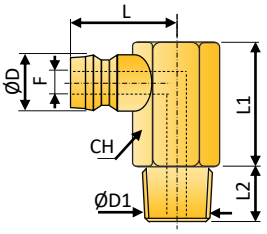

	Codice-Code	misura size	CH	D	D1	F	L	L1	L2
	Senza valvola - without valve								
	PC1126-09-R018-B-E	9	11	9	R1/8"	6	23	18	9
stock	PC1126-09-R014-B-E	9	15	9	R1/4"	6	23	22	12
	PC1126-09-R038-B-E	9	15	9	R3/8"	6	23	22	12
stock	PC1126-13-R014-B-E	13	15	13	R1/4"	9	25	22	12
	PC1126-13-R038-B-E	13	17	13	R3/8"	9	25	22	12
	PC1126-19-R012-B-E	19	24	19	R1/2"	13	35	31	16

PC1134 NIPPLO PROLUNGATO LISCIO
EXTENDED STRAIGHT TUBE PLUG

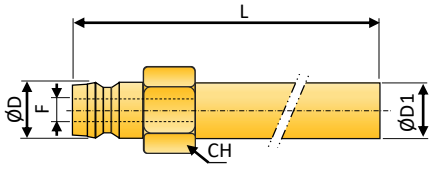

	Codice-Code	misura size	CH	D	F	D1	D2	L	L1
	PC1134-09-08-B-063-E	9	9	9	5	8	-	63	-
stock	PC1134-09-10-B-100-E	9	11	9	6	10	-	100	-
	PC1134-09-10-B-120-E	9	11	9	6	10	-	120	-
stock	PC1134-09-10-B-240-E	9	11	9	6	10	-	240	-
	PC1134-09-10-B-360-E	9	11	9	6	10	-	360	-
stock	PC1134-13-14-B-150-E	13	15	13	9	14	-	150	-
stock	PC1134-13-14-B-300-E	13	15	13	9	14	-	300	-
	PC1134-13-14-B-450-E	13	15	13	9	14	-	450	-
	PC1134-19-21-B-500-E	19	15	19	13	21	-	500	-
	PC1134-19-21-B-800-E	19	15	19	13	21	-	800	-

PC1136 NIPPLO PROLUNGATO ESTREMITA' FILETTO MASCHIO BSPP
EXTENDED STRAIGHT TUBE AND BSPP MALE THREAD PLUG

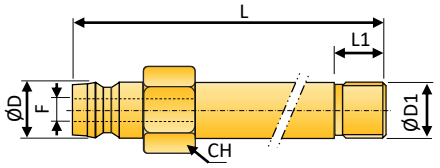

	Codice-Code	misura size	CH	D	F	D1	D2	L	L1
	PC1136-09-G018-B-060-E	9	11	9	6	G1	-	60	7
	PC1136-09-G018-B-100-E	9	11	9	6	G1	-	100	7
	PC1136-09-G018-B-120-E	9	11	9	6	G1	-	150	7
	PC1136-09-G014-B-060-E	9	13	9	6	G1	-	60	9
stock	PC1136-09-G014-B-100-E	9	13	9	6	G1	-	100	9
stock	PC1136-09-G014-B-150-E	9	13	9	6	G1	-	150	9
	PC1136-13-G014-B-060-E	13	14	13	9	G1	-	60	9
stock	PC1136-13-G014-B-100-E	13	14	13	9	G1	-	100	9
	PC1136-13-G014-B-150-E	13	14	13	9	G1	-	150	9
stock	PC1136-13-G014-B-200-E	13	14	13	9	G1	-	200	9
	PC1136-13-G014-B-250-E	13	14	13	9	G1	-	250	9
stock	PC1136-13-G014-B-300-E	13	14	13	9	G1	-	300	9
	PC1136-13-G014-B-400-E	13	14	13	9	G1	-	400	9
	PC1136-13-G038-B-060-E	13	17	13	9	G3	-	60	9
	PC1136-13-G038-B-100-E	13	17	13	9	G3	-	100	9
	PC1136-13-G038-B-150-E	13	17	13	9	G3	-	150	9
	PC1136-13-G038-B-200-E	13	17	13	9	G3	-	200	9
	PC1136-13-G038-B-250-E	13	17	13	9	G3	-	250	9
	PC1136-13-G038-B-300-E	19	17	19	13	G3	-	300	9
	PC1136-13-G038-B-400-E	19	17	19	13	G3	-	400	9
	PC1136-19-G012-B-150-E	19	22	19	13	G1	-	150	12
	PC1136-19-G012-B-300-E	19	22	19	13	G1	-	300	12
	PC1136-19-G012-B-500-E	19	22	19	13	G1	-	500	12

PC1140 NIPPLO PROLUNGATO FILETTATO BSPP
EXTENDED STRAIGHT BSPP THREAD PLUG

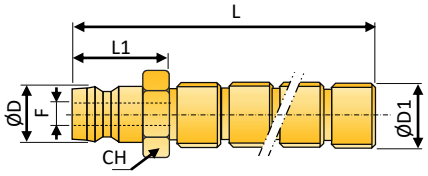

	Codice-Code	misura size	CH	D	F	D1	D2	L	L1
	PC1140-09-G018-B-100-T	9	11	9	6	G1	-	100	40
stock	PC1140-09-G014-B-100-T	9	14	9	6	G1	-	100	40
	PC1140-09-G038-B-100-T	9	17	9	6	G3	-	100	40
stock	PC1140-13-G014-B-100-T	13	14	13	9	G1	-	100	40
	PC1140-13-G038-B-100-T	13	17	13	9	G3	-	100	40

PC1200

Innesti rapidi standard Internazionale, serie Jiffy, intercambiabili con altri marchi con la stessa denominazione o profilo. La serie TOP si contraddistingue per la qualità particolarmente elevata.
International Standard Quick couplings, Jiffy series. Fully interchangeable with other brands with the same plug profile. The Jiffy line is our Best Quality solution.

CARATTERISTICHE DI FUNZIONAMENTO – TECHNICAL FEATURES

Range di temperatura di esercizio:	acqua -5\+160°C con guarnizioni standard FKM olio diatermico -20°C / +200°C con guarnizioni standard FKM
Pressione max. di esercizio:	13 Bar (rapporto sicurezza 4 a 1)
Working temperature range:	water -5°\+160°C with FKM standard seals diathermic oil -5\+200°C with FKM standard seals
Max. working pressure:	13 Bar (safety factor 4 to 1)

Diametri e passaggio flusso:
Size and flow size:

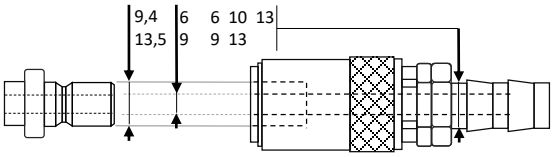

CARATTERISTICHE COSTRUTTIVE – CONSTRUCTION FEATURES

Corpo innesto – Socket Body	Ottone – Brass
Ghiera innesto– Sleeve	Ottone (nichelato per versione con valvola) – Brass (nikel plated on shut-off valve version)
Valvola – Valve	Ottone – Brass
Molle – Springs	AISI 301
Sfere – Balls	AISI 420
Raccordo – Plug	Ottone – Brass
O-Rings	FKM (Viton®)

OPTIONALS

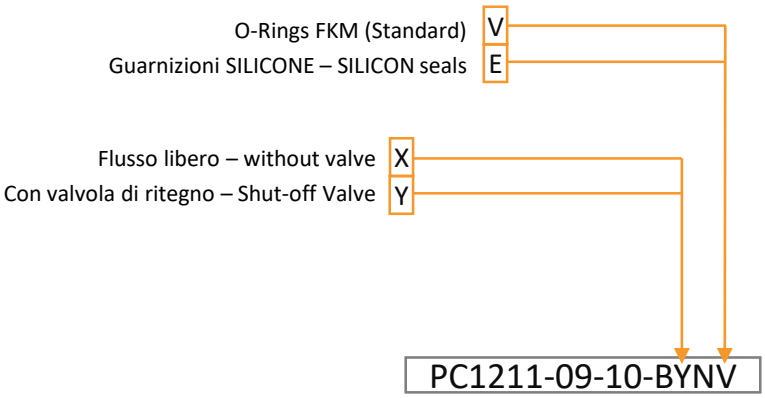

PC1201 INNESTO RAPIDO CON PORTA-GOMMA EASY-LOCK
EASY-LOCK HOSE STEM SOCKET

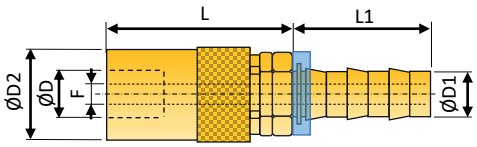

	Codice-Code	misura size	D	F	D1 mm-inch	D2	L	L1
	Senza valvola - without valve							
	PC1201-09-06-BXNV	6	9,5	5	6,3-1/4"	17	29	25,5
stock	PC1201-09-10-BXNV	6	9,5	6	9,5-3/8"	17	29	25,5
	PC1201-13-10-BXNV	9	13,6	6	9,5-3/8"	22,6	37	25
stock	PC1201-13-13-BXNV	9	13,6	9	12,7-1/2"	22,6	37	25
	PC1201-20-13-BXNV	16	20	14	12,7-1/2"	30	37	25
	PC1201-20-19-BXNV	16	20	14	19-3/4"	30	37	25
	Con valvola - with valve							
	PC1201-09-06-BYNV	6	9,5	5	6,3-1/4"	17	29	25,5
stock	PC1201-09-10-BYNV	6	9,5	6	9,5-3/8"	17	29	25,5
	PC1201-13-10-BYNV	9	13,6	6	9,5-3/8"	22,6	37	25
stock	PC1201-13-13-BYNV	9	13,6	9	12,7-1/2"	22,6	37	25
	PC1201-20-13-BYNV	16	20	14	12,7-1/2"	30	37	25
	PC1201-20-19-BYNV	16	20	14	19-3/4"	30	37	25

PC1205 INNESTO RAPIDO CON PORTA-GOMMA EASY-LOCK 45°
45° EASY-LOCK HOSE STEM SOCKET

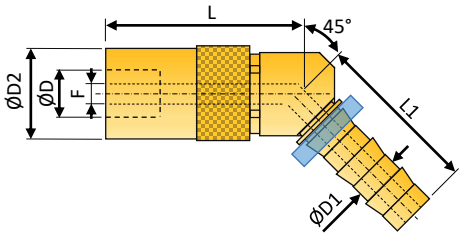

	Codice-Code	misura size	D	F	D1 mm-inch	D2	L	L1
	Senza valvola - without valve							
	PC1205-09-06-BXNV	6	9,5	5	6,3-1/4"	17	38	34
	PC1205-09-10-BXNV	6	9,5	6	9,5-3/8"	17	38	34
	PC1205-13-10-BXNV	9	13,6	6	9,5-3/8"	22,6	52	37
	PC1205-13-13-BXNV	9	13,6	9	12,7-1/2"	22,6	52	37
	PC1205-20-13-BXNV	16	20	14	12,7-1/2"	30	68	69
	PC1205-20-19-BXNV	16	20	14	19-3/4"	30	68	69
	Con valvola - with valve							
	PC1205-09-06-BYNV	6	9,5	5	6,3-1/4"	17	38	25,5
	PC1205-09-10-BYNV	6	9,5	6	9,5-3/8"	17	38	25,5
	PC1205-13-10-BYNV	9	13,6	6	9,5-3/8"	22,6	52	30
	PC1205-13-13-BYNV	9	13,6	9	12,7-1/2"	22,6	52	30
	PC1205-20-13-BYNV	16	20	14	12,7-1/2"	30	68	69
	PC1205-20-19-BYNV	16	20	14	19-3/4"	30	68	69

PC1209 INNESTO RAPIDO CON PORTA-GOMMA EASY-LOCK 90°
90° EASY-LOCK HOSE STEM SOCKET

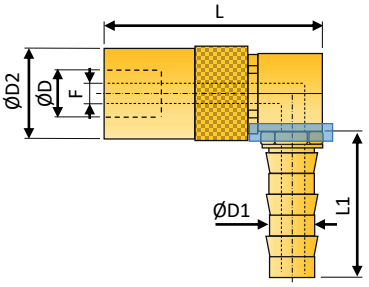

	Codice-Code	misura size	D	F	D1 mm-inch	D2	L	L1
	Senza valvola - without valve							
	PC1209-09-06-BXNV	6	9,5	5	6,3-1/4"	17	38	27
stock	PC1209-09-10-BXNV	6	9,5	6	9,5-3/8"	17	38	27
	PC1209-13-10-BXNV	9	13,6	6	9,5-3/8"	22,6	52	27
stock	PC1209-13-13-BXNV	9	13,6	9	12,7-1/2"	22,6	52	27
	PC1209-20-13-BXNV	16	20	14	12,7-1/2"	30	68	46
	PC1209-20-19-BXNV	16	20	14	19-3/4"	30	68	46
	Con valvola - with valve							
	PC1209-09-06-BYNV	6	9,5	5	6,3-1/4"	17	38	27
stock	PC1209-09-10-BYNV	6	9,5	6	9,5-3/8"	17	38	27
	PC1209-13-10-BYNV	9	13,6	6	9,5-3/8"	22,6	52	27
stock	PC1209-13-13-BYNV	9	13,6	9	12,7-1/2"	22,6	52	27
	PC1209-20-13-BYNV	16	20	14	12,7-1/2"	30	68	46
	PC1209-20-19-BYNV	16	20	14	19-3/4"	30	68	46

PC1203 INNESTO RAPIDO CON PORTA-GOMMA STANDARD
STANDARD HOSE STEM SOCKET

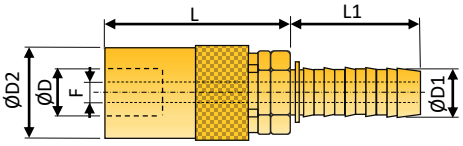

	Codice-Code	misura size	D	F	D1 mm	D2	L	L1
	Senza valvola - without valve							
	PC1203-09-06-BXNV	6	9,5	5	7,3	17	27	25
stock	PC1203-09-09-BXNV	6	9,5	6	10,5	17	27	25
	PC1203-13-09-BXNV	9	13,6	6	12,2	22,6	37	25
stock	PC1203-13-13-BXNV	9	13,6	9	14	22,6	37	25
	PC1203-20-19-BXNV	16	20	14	20	30	45	32
	Con valvola - with valve							
	PC1203-09-06-BYNV	6	9,5	5	7,3	17	30	27
stock	PC1203-09-09-BYNV	6	9,5	6	10,5	17	30	27
	PC1203-13-09-BYNV	9	13,6	6	12,2	22,6	30	27
stock	PC1203-13-13-BYNV	9	13,6	9	14	22,6	30	27
	PC1203-20-19-BYNV	16	20	14	20	30	57	46

PC1207 INNESTO RAPIDO CON PORTA-GOMMA STANDARD 45°
45° STANDARD HOSE STEM SOCKET

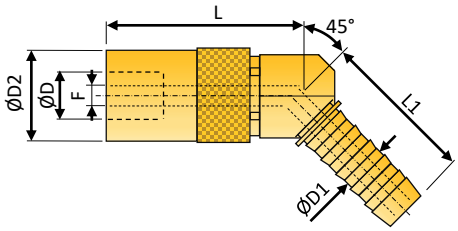

	Codice-Code	misura size	D	F	D1 mm	D2	L	L1
	Senza valvola - without valve							
	PC1207-09-06-BXNV	6	9,5	5	7,3	17	38	27
	PC1207-09-09-BXNV	6	9,5	6	10,5	17	38	27
	PC1207-13-09-BXNV	9	13,6	6	12,2	22,6	52	27
	PC1207-13-13-BXNV	9	13,6	9	14	22,6	52	27
	PC1207-13-13-BXNV	16	20	14	20	30	68	46
	Con valvola - with valve							
	PC1207-09-06-BYNV	6	9,5	5	7,3	17	38	27
	PC1207-09-10-BYNV	6	9,5	6	10,5	17	38	27
	PC1207-13-09-BYNV	9	13,6	6	12,2	22,6	52	27
	PC1207-13-13-BYNV	9	13,6	9	14	22,6	52	27
	PC1207-13-13-BYNV	16	20	14	20	30	68	46

PC1211 INNESTO RAPIDO CON PORTA-GOMMA STANDARD 90°
WITH 90° STANDARD HOSE STEM SOCKET

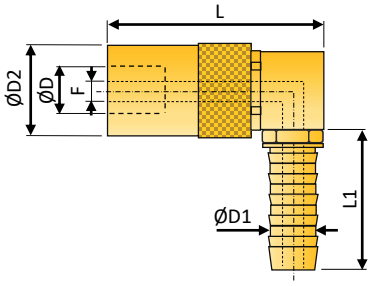

	Codice-Code	misura size	D	F	D1 mm	D2	L	L1
	Senza valvola - without valve							
	PC1211-09-06-BXNV	6	9,5	5	7,3	17	38	27
stock	PC1211-09-09-BXNV	6	9,5	6	10,5	17	38	27
	PC1211-13-09-BXNV	9	13,6	6	12,2	22,6	52	27
stock	PC1211-13-13-BXNV	9	13,6	9	14	22,6	52	27
	PC1211-13-13-BXNV	16	20	14	20	30	67	46
	Con valvola - with valve							
	PC1211-09-06-BYNV	6	9,5	5	7,3	17	38	27
stock	PC1211-09-09-BYNV	6	9,5	6	10,5	17	38	27
	PC1211-13-09-BYNV	9	13,6	6	12,2	22,6	52	27
stock	PC1211-13-13-BYNV	9	13,6	9	14	22,6	52	27
	PC1211-13-13-BYNV	16	20	14	20	30	67	46

PC1213 INNESTO RAPIDO CON FILETTO MASCHIO BSPP (CONO DIN 3863)
BSPP MALE THREAD SOCKET (INNER CONE DIN 3863)

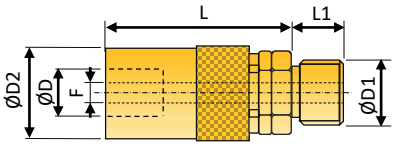

	Codice-Code	misura size	D	F	D1	D2	L	L1	L1
	Senza valvola - without valve								
stock	PC1213-09-G014-BXNV	6	9,5	6	G1/4"	17	38,5	7,5	7,5
stock	PC1213-13-G038-BXNV	9	13,6	9	G3/8"	22,6	49,5	10,5	10,5
	PC1213-20-G012-BXNV	16	20	13	G1/2"	30	64	12	12
	Con valvola - with valve								
stock	PC1213-09-G014-BYNV	6	9,5	6	G1/4"	17	38,5	7,5	7,5
stock	PC1213-13-G038-BYNV	9	13,6	9	G3/8"	22,6	49,5	10,5	10,5
	PC1213-20-G012-BYNV	16	20	13	G1/2"	30	64	12	12

PC1219 INNESTO RAPIDO CON FILETTO FEMMINA BSPP
BSPP FEMALE THREAD SOCKET

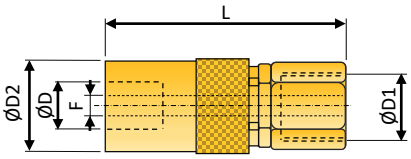

Codice-Code	misura size	D	F	D1	D2	L	L1	L2
Senza valvola - without valve								
PC1219-09-G014-BXNV	6	9,5	6	G1/4"	17	39	-	-
PC1219-13-G038-BXNV	9	13,6	9	G3/8"	22,6	53	-	-
PC1219-20-G012-BXNV	16	20	13	G1/2"	30	59	-	-
Con valvola - with valve								
PC1219-09-G014-BYNV	6	9,5	6	G1/4"	17	39	-	-
PC1219-13-G038-BYNV	9	13,6	9	G3/8"	22,6	53	-	-
PC1219-20-G012-BYNV	16	20	13	G1/2"	30	59	-	-

PC1226 NIPPLO FILETTO MASCHIO BSPT 90°
BSPT 90° MALE THREAD PLUG

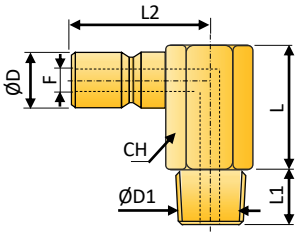

Codice-Code	misura size	D	F	D1	L	L1	CH	L2
Senza valvola - without valve								
PC1226-09-R018-B	6	9,5	6	R1/8"	18	9	13	23
PC1226-13-R014-B	9	13,5	9	R1/4"	25	9	17	24,5

PC1222 NIPPLO FILETTO MASCHIO BSPT CON TEFLON
BSPT TAPERED MALE THREAD PLUG

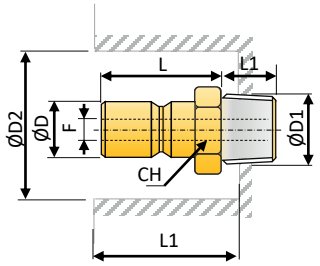

	Codice-Code	misura size	D	F	D1 mm-inch	D2	L	L1	CH
	Senza valvola - without valve								
stock	PC1222-09-R018-B	6	9,4	6	R1/8"	22	24	18	13
stock	PC1222-09-R014-B	6	9,4	6	R1/4"	26	29	20	13
	PC1222-09-R038-B	6	9,4	6	R3/8"	30	30	22	16
stock	PC1222-13-R014-B	9	13,5	9	R1/8"	26	30	26	14
stock	PC1222-13-R038-B	9	13,5	9	R3/8"	30	34	28	19
	PC1222-13-R012-B	9	13,5	9	R1/2"	37	39	28	24
	PC1222-20-R012-B	16	19,9	9	R1/2"	32	44	38	22
	PC1222-20-R034-B	16	19,9	9	R3/4"	38	45	40	29
	Con valvola - with valve								
	PC1222-09-R014-BYV	6	9,4	6	R1/4"	28	29	20	16
	PC1222-09-R038-BYV	6	9,4	6	R3/8"	30	29,5	20	19
	PC1222-13-R014-BYV	9	13,5	9	R1/4"	28	34	27	16
	PC1222-13-R038-BYV	9	13,5	9	R3/8"	30	34	28	19
	PC1222-13-R012-BYV	9	13,5	9	R1/2"	35	37	28	24
	PC1222-20-R012-BYV	16	19,9	15	R1/2"	35	44,4	34	-
	PC1222-20-R034-BYV	16	19,9	15	R3/4"	42	44,4	32	-

PC1214 NIPPLO FILETTO MASCHIO BSPP O METRICO
BSPP OR METRIC MALE THREAD PLUG

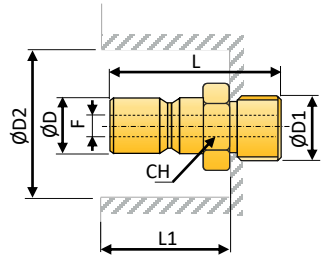

Codice-Code	misura size	D	F	D1 mm-inch	D2	L	L1	CH
Senza valvola - without valve								
PC1214-09-M010-B	6	9,4	6	M10x1	22	23	18	13
PC1214-13-M010-B	9	13,5	9	M10x1	26	29,5	26	16
PC1214-13-G014-B	9	13,5	9	G1/4"	30	34	23	16
PC1214-13-G038-B	9	13,5	9	G3/8"	30	34	29,5	19
PC1214-19-G012-B	16	19,9	15	G1/2"	32	40	29,5	22
PC1214-13-G034-B	9	13,5	15	G3/4"	32	45	29,5	22

PC1230 NIPPLO FILETTO FEMMINA BSPP
BSPP FEMALE THREAD PLUG

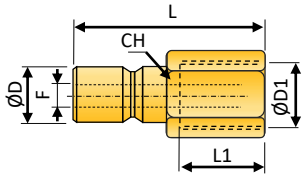

Codice-Code	misura size	D	F	D1 mm-inch	D2	L	CH
Senza valvola - without valve							
PC1230-09-G018-B	6	9,4	6	G1/8"	-	28	13
PC1230-09-G014-B	6	9,4	6	G1/4"	-	32	16
PC1230-09-G038-B	6	9,4	6	G3/8"	-	34	19
PC1230-13-G018-B	9	13,5	9	G1/8"	-	32	16
PC1230-13-G014-B	9	13,5	9	G1/4"	-	27	16
PC1230-13-G038-B	9	13,5	9	G3/8"	-	28	19
PC1230-13-G012-B	9	13,5	9	G1/2"	-	30	24
PC1230-20-G038-B	16	19,9	15	G3/8"	-	40	22
PC1230-20-G012-B	16	19,9	15	G1/2"	-	45	24

PC1238 NIPPLO PROLUNGATO ESTREMITA' FILETTO MASCHIO BSPT
EXTENDED STRAIGHT TUBE AND BSPT MALE THREAD PLUG

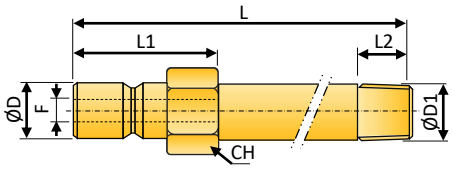

Codice-Code	misura size	D	F	D1	D2	L	CH
PC1238-09-10-B-100	6	9,4	6	R1/8"	10	150	11
PC1238-13-14-B-150	9	13,5	9	R1/4"	14	250	15

PC1240 NIPPLO PROLUNGATO FILETTATO BSPP
EXTENDED STRAIGHT BSPP THREAD PLUG

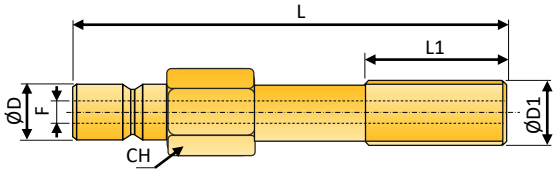

Codice-Code	misura size	D	F	D1	L	L1	CH
PC1240-09-G18-B-100	6	9,4	6	G1/8"	100	61	12
PC1240-09-G18-B-150	6	9,4	6	G1/8"	150	61	12
PC1240-09-G18-B-200	6	9,4	6	G1/8"	200	61	12
PC1240-09-G14-B-100	6	9,4	6	G1/4"	100	61	15
PC1240-09-G14-B-150	6	9,4	6	G1/4"	150	61	15
PC1240-09-G14-B-200	6	9,4	6	G1/4"	200	61	15
PC1240-09-G38-B-100	6	9,4	6	G3/8"	100	61	18
PC1240-09-G38-B-150	6	9,4	6	G3/8"	150	61	18
PC1240-09-G38-B-200	6	9,4	6	G3/8"	200	61	18
PC1240-13-G18-B-100	6	9,4	6	G1/8"	100	61	15
PC1240-13-G18-B-150	6	9,4	6	G1/8"	150	61	15
PC1240-13-G18-B-200	6	9,4	6	G1/8"	200	61	15
PC1240-13-G14-B-100	6	9,4	9	G1/4"	100	61	15
PC1240-13-G14-B-150	6	9,4	9	G1/4"	150	61	15
PC1240-13-G14-B-200	6	9,4	9	G1/4"	200	61	15
PC1240-13-G38-B-100	6	9,4	9	G3/8"	100	61	18
PC1240-13-G38-B-150	9	13,5	9	G1/4"	150	61	18
PC1240-13-G38-B-200	9	13,5	9	G3/8"	200	61	18

PC1200-E

Innesti rapidi standard Internazionale, serie ECO, intercambiabili con altri marchi con la stessa denominazione o profilo. La serie ECO si contraddistingue per prezzo particolarmente vantaggioso.
International Standard Quick couplings, ECO series. Fully interchangeable with other brands with the same plug profile. The ECO line is our Best Price solution.

CARATTERISTICHE DI FUNZIONAMENTO – TECHNICAL FEATURES

Range di temperatura di esercizio:	acqua non pressurizzata\olio diatermico -20\+180°C con guarnizioni standard FKM acqua pressurizzata -5°C / +140°C con guarnizioni EPDM (su richiesta) olio -20\+280°C con guarnizioni FFKM (su richiesta)
Pressione max. di esercizio:	15 Bar
Working temperature range:	water\diathermic oil -20°\+180°C with FKM seals (standard) pressurized water -5\+140°C with EPDM seals (on request)
Max. working pressure:	15 Bar

Diametri e passaggio flusso:
Size and flow size:

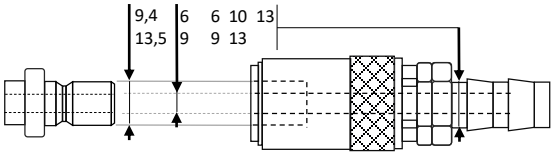

CARATTERISTICHE COSTRUTTIVE – CONSTRUCTION FEATURES

Corpo – Socket Body	Ottone – Brass
Ghiera – Sleeve	Ottone – Brass
Valvola – Valve	Ottone – Brass
Molle – Springs	Acciaio Inox – Stainless Steel
Sfere – Balls	Acciaio Inox – Stainless Steel
Nipplo – Nipple	Ottone – Brass
O-Rings	FKM (Viton®)

OPTIONALS

Versione ECO – ECO version [E]

O-Rings FKM (Standard) [V]

Flusso libero – without valve [X]

Con valvola di ritegno – Shut-off Valve [Y]

[B]

[S]

PC1111-09-10-BYNV-E

Bloccaggio di sicurezza della ghiera – Sleeve safe-lock [L]

Senza bloccaggio no safe-lock [N]

PC1201 INNESTO RAPIDO CON PORTA-GOMMA EASY-LOCK
EASY-LOCK HOSE STEM SOCKET

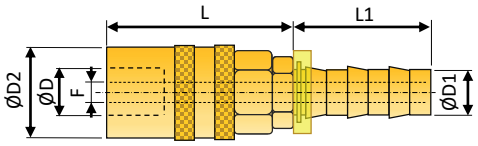

Codice-Code	misura size	D	F	D1	D2	L	L1
Senza valvola - without valve							
PC1201-09-06-BXNV-E	6	9,5	4	6,3	17	26	24
PC1201-09-10-BXNV-E	6	9,5	8	9,5	17	26	24
PC1201-13-10-BXNV-E	9	13,6	8	9,5	23	36	28
PC1201-13-13-BXNV-E	9	13,6	10	12,7	23	36	28
PC1201-20-16-BXNV-E	16	20	13	16	32	65	38
PC1201-20-19-BXNV-E	16	20	15	19	32	65	38
Con valvola - with valve							
PC1201-09-06-BYNV-E	6	9,5	4	6,3	17	33	24
PC1201-09-10-BYNV-E	6	9,5	8	9,5	17	33	24
PC1201-13-10-BYNV-E	9	13,6	8	9,5	23	40	28
PC1201-13-13-BYNV-E	9	13,6	10	12,7	23	40	28
PC1201-20-16-BYNV-E	16	20	13	16	32	65	38
PC1201-20-19-BYNV-E	16	20	15	19	32	65	38

PC1205 INNESTO RAPIDO CON PORTA-GOMMA EASY-LOCK 45°
45° EASY-LOCK HOSE STEM SOCKET

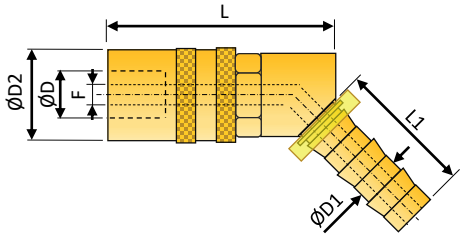

Codice-Code	misura size	D	F	D1	D2	L	L1
Senza valvola - without valve							
PC1205-09-06-BXNV-E	6	9,5	4	6,3	17	45,5	24
PC1205-09-10-BXNV-E	6	9,5	8	9,5	17	45,5	24
PC1205-13-10-BXNV-E	9	13,6	8	9,5	23	60	28
PC1205-13-13-BXNV-E	9	13,6	10	12,7	23	60	28
PC1205-20-16-BXNV-E	16	20	13	16	32	79	38
PC1205-20-19-BXNV-E	16	20	15	19	32	79	38
Con valvola - with valve							
PC1205-09-06-BYNV-E	6	9,5	4	6,3	17	45,5	24
PC1205-09-10-BYNV-E	6	9,5	8	9,5	17	45,5	24
PC1205-13-10-BYNV-E	9	13,6	8	9,5	23	60	28
PC1205-13-13-BYNV-E	9	13,6	10	12,7	23	60	28
PC1205-20-16-BYNV-E	16	20	13	16	32	79	38
PC1205-20-19-BYNV-E	16	20	15	19	32	79	38

PC1209 INNESTO RAPIDO CON PORTA-GOMMA EASY-LOCK 90°
90° EASY-LOCK HOSE STEM SOCKET

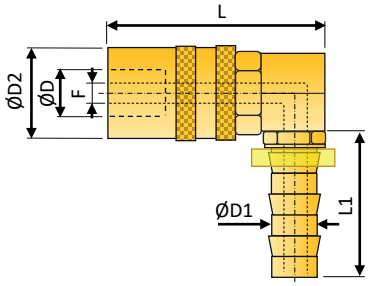

Codice-Code	misura size	D	F	D1	D2	L	L1
Senza valvola - without valve							
PC1209-09-06-BXNV-E	6	9,5	4	6,3	17	45,5	23
PC1209-09-10-BXNV-E	6	9,5	8	9,5	17	45,5	23
PC1209-13-10-BXNV-E	9	13,6	8	9,5	23	60	28
PC1209-13-13-BXNV-E	9	13,6	10	12,7	23	60	28
PC1209-20-16-BXNV-E	16	20	13	16	32	79	38
PC1209-20-19-BXNV-E	16	20	15	19	32	79	38
Con valvola - with valve							
PC1209-09-06-BYNV-E	6	9,5	4	6,3	17	45,5	23
PC1209-09-10-BYNV-E	6	9,5	8	9,5	17	45,5	23
PC1209-13-10-BYNV-E	9	13,6	8	9,5	23	60	28
PC1209-13-13-BYNV-E	9	13,6	10	12,7	23	60	28
PC1209-20-16-BYNV-E	16	20	13	16	32	79	38
PC1209-20-19-BYNV-E	16	20	15	19	32	79	38

PC1203 INNESTO RAPIDO CON PORTA-GOMMA STANDARD
STANDARD HOSE STEM SOCKET

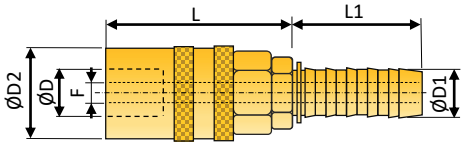

Codice-Code	misura size	D	F	D1	D2	L	L1
Senza valvola - without valve							
PC1203-09-06-BXNV-E	6	9,5	4	6	17	27	23
PC1203-09-08-BXNV-E	6	9,5	6	8	17	27	23
PC1203-09-10-BXNV-E	6	9,5	8	10	17	27	23
PC1203-13-10-BXNV-E	9	13,6	8	10	23	33	28
PC1203-13-11-BXNV-E	9	13,6	9	11	23	33	28
PC1203-13-13-BXNV-E	9	13,6	10	13	23	33	28
PC1203-20-16-BXNV-E	16	20	13	16	32	45	27
PC1203-20-19-BXNV-E	16	20	16	19	32	45	27
Con valvola - with valve							
PC1203-09-06-BYNV-E	6	9,5	4	6	17	34	23
PC1203-09-08-BYNV-E	6	9,5	6	8	17	34	23
PC1203-09-10-BYNV-E	6	9,5	8	10	17	34	23
PC1203-13-10-BYNV-E	9	13,6	8	10	23	40	28
PC1203-13-11-BYNV-E	9	13,6	9	11	23	40	28
PC1203-13-13-BYNV-E	9	13,6	10	13	23	40	28
PC1203-20-16-BYNV-E	16	20	13	16	32	62	27
PC1203-20-19-BYNV-E	16	20	16	19	32	70	27

PC1207 INNESTO RAPIDO CON PORTA-GOMMA STANDARD 45°
45° STANDARD HOSE STEM SOCKET

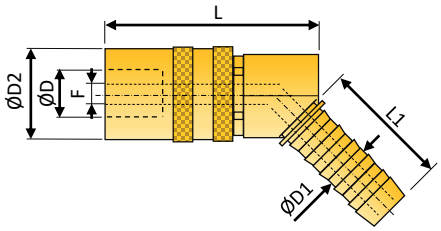

Codice-Code	misura size	D	F	D1	D2	L	L1
Senza valvola - without valve							
PC1207-09-06-BXNV-E	6	9,5	4	6	17	45,5	23
PC1207-09-08-BXNV-E	6	9,5	6	8	17	45,5	23
PC1207-09-10-BXNV-E	6	9,5	8	10	17	45,5	23
PC1207-13-10-BXNV-E	9	13,6	8	10	23	60	28
PC1207-13-11-BXNV-E	9	13,6	9	11	23	60	28
PC1207-13-13-BXNV-E	9	13,6	10	13	23	60	28
PC1207-20-16-BXNV-E	16	20	13	16	32	79	27
PC1207-20-19-BXNV-E	16	20	16	19	32	79	27
Con valvola - with valve							
PC1207-09-06-BYNV-E	6	9,5	4	6	17	45,5	23
PC1207-09-08-BYNV-E	6	9,5	6	8	17	45,5	23
PC1207-09-10-BYNV-E	6	9,5	8	10	17	45,5	23
PC1207-13-10-BYNV-E	9	13,6	8	10	23	60	28
PC1207-13-11-BYNV-E	9	13,6	9	11	23	60	28
PC1207-13-13-BYNV-E	9	13,6	10	13	23	60	28
PC1207-20-16-BYNV-E	16	20	13	16	32	79	27
PC1207-20-19-BYNV-E	16	20	16	19	32	79	27

PC1211 INNESTO RAPIDO CON PORTA-GOMMA STANDARD 90°
WITH 90° STANDARD HOSE STEM SOCKET

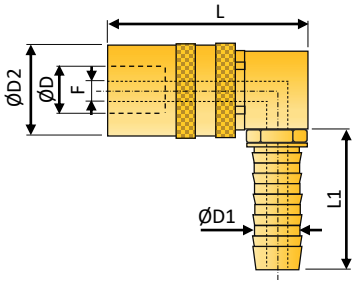

Codice-Code	misura size	D	F	D1	D2	L	L1
Senza valvola - without valve							
PC1211-09-06-BXNV-E	6	9,5	4	6	17	45,5	22,5
PC1211-09-08-BXNV-E	6	9,5	6	8	17	45,5	22,5
PC1211-09-10-BXNV-E	6	9,5	8	10	17	45,5	22,5
PC1211-13-10-BXNV-E	9	13,6	8	10	23	60	28
PC1211-13-11-BXNV-E	9	13,6	9	11	23	60	28
PC1211-13-13-BXNV-E	9	13,6	10	13	23	60	28
PC1211-20-16-BXNV-E	16	20	13	16	32	79	27
PC1211-20-19-BXNV-E	16	20	16	19	32	79	27
Con valvola - with valve							
PC1211-09-06-BYNV-E	6	9,5	4	6	17	45,5	22,5
PC1211-09-08-BYNV-E	6	9,5	6	8	17	45,5	22,5
PC1211-09-10-BYNV-E	6	9,5	8	10	17	45,5	22,5
PC1211-13-10-BYNV-E	9	13,6	8	10	23	60	28
PC1211-13-11-BYNV-E	9	13,6	9	11	23	60	28
PC1211-13-13-BYNV-E	9	13,6	10	13	23	60	28
PC1211-20-16-BYNV-E	16	20	13	16	32	79	27
PC1211-20-19-BYNV-E	16	20	16	19	32	79	27

PC1213 INNESTO RAPIDO CON FILETTO MASCHIO BSPP (CONO DIN 3863)
BSPP MALE THREAD SOCKET (INNER CONE DIN 3863)

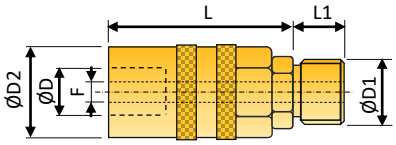

Codice-Code	misura size	CH	D	F	D1	D2	L	L1
Senza valvola - without valve								
PC1213-09-G018-BXNV-E	6	17	9,5	4	G1/8"	17	36	8
PC1213-09-G014-BXNV-E	6	17	9,5	6	G1/4"	17	36	8
PC1213-09-G038-BXNV-E	6	17	9,5	6	G3/8"	17	36	8
PC1213-09-M014-BXNV-E	6	17	9,5	6	M14x1,5	17	35	11
PC1213-13-G014-BXNV-E	9	17	13,6	9	G1/4"	23	45	11
PC1213-13-G038-BXNV-E	9	19	13,6	9	G3/8"	23	45	11
PC1213-13-G012-BXNV-E	9	24	13,6	9	G1/2"	23	45	11
PC1213-13-M016-BXNV-E	9	17	13,6	9	M16x1,5	23	45	12
PC1213-13-M018-BXNV-E	9	19	13,6	9	M18x1,5	23	45	13
PC1213-20-G012-BXNV-E	16	27	20	16	G1/2"	32	57	23
PC1213-20-G034-BXNV-E	16	30	20	16	G3/4"	32	57	25
Con valvola - with valve								
PC1213-09-G018-BYNV-E	6	17	9,5	4	G1/8"	17	36	8
PC1213-09-G014-BYNV-E	6	17	9,5	6	G1/4"	17	36	8
PC1213-09-G038-BYNV-E	6	17	9,5	6	G3/8"	17	36	8
PC1213-09-M014-BYNV-E	6	17	9,5	6	M14x1,5	17	35	11
PC1213-13-G014-BYNV-E	9	17	13,6	9	G1/4"	23	45	11
PC1213-13-G038-BYNV-E	9	19	13,6	9	G3/8"	23	45	11
PC1213-13-G012-BYNV-E	9	24	13,6	9	G1/2"	23	45	11
PC1213-13-M016-BYNV-E	9	17	13,6	9	M16x1,5	23	45	12
PC1213-13-M018-BYNV-E	9	19	13,6	9	M18x1,5	23	45	13
PC1213-20-G012-BYNV-E	16	27	20	16	G1/2"	32	57	23
PC1213-20-G034-BYNV-E	16	30	20	16	G3/4"	32	57	25

PC1215 INNESTO RAPIDO CON FILETTO MASCHIO BSPP 45° (CONO DIN 3863)
BSPP 45° MALE THREAD SOCKET (INNER CONE DIN 3863)

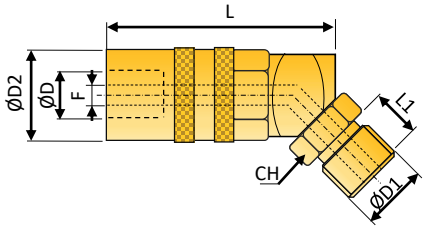

Codice-Code	misura size	CH	D	F	D1	D2	L	L1
Senza valvola - without valve								
PC1215-09-G018-BXNV-E	6	17	9,5	4	G1/8"	17	45,5	8
PC1215-09-G014-BXNV-E	6	17	9,5	6	G1/4"	17	45,5	11
PC1215-13-G014-BXNV-E	9	17	13,6	9	G1/4"	23	60	11
PC1215-13-G038-BXNV-E	9	19	13,6	9	G3/8"	23	60	11
PC1215-13-G012-BXNV-E	9	24	13,6	9	G1/2"	23	60	11
PC1215-13-M016-BXNV-E	9	17	13,6	9	M16x1,5	23	60	12
PC1215-20-G012-BXNV-E	16	27	20	16	G1/2"	32	79	12
Con valvola - with valve								
PC1215-09-G018-BYNV-E	6	17	9,5	4	G1/8"	17	45,5	8
PC1215-09-G014-BYNV-E	6	17	9,5	6	G1/4"	17	45,5	11
PC1215-13-G014-BYNV-E	9	17	13,6	9	G1/4"	23	60	11
PC1215-13-G038-BYNV-E	9	19	13,6	9	G3/8"	23	60	11
PC1215-13-G012-BYNV-E	9	24	13,6	9	G1/2"	23	60	11
PC1215-13-M016-BYNV-E	9	17	13,6	9	M16x1,5	23	60	12
PC1215-20-G012-BYNV-E	16	27	20	16	G1/2"	32	79	12

PC1217 INNESTO RAPIDO CON FILETTO MASCHIO BSPP 90° (CONO DIN 3863)
BSPP 90° MALE THREAD SOCKET (INNER CONE DIN 3863)

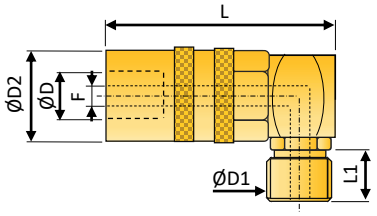

Codice-Code	misura size	CH	D	F	D1	D2	L	L1
Senza valvola - without valve								
PC1217-09-G018-BXNV-E	6	17	9,5	4	G1/8"	17	45,5	8
PC1217-09-G014-BXNV-E	6	17	9,5	6	G1/4"	17	45,5	11
PC1217-13-G014-BXNV-E	9	17	13,6	9	G1/4"	23	60	11
PC1217-13-G038-BXNV-E	9	19	13,6	9	G3/8"	23	60	11
PC1217-13-G012-BXNV-E	9	24	13,6	9	G1/2"	23	60	11
PC1217-13-M016-BXNV-E	9	17	13,6	9	M16x1,5	23	60	12
PC1217-20-G012-BXNV-E	16	27	20	16	G1/2"	32	79	12
Con valvola - with valve								
PC1217-09-G018-BYNV-E	6	17	9,5	4	G1/8"	17	45,5	8
PC1217-09-G014-BYNV-E	6	17	9,5	6	G1/4"	17	45,5	11
PC1217-13-G014-BYNV-E	9	17	13,6	9	G1/4"	23	60	11
PC1217-13-G038-BYNV-E	9	19	13,6	9	G3/8"	23	60	11
PC1217-13-G012-BYNV-E	9	24	13,6	9	G1/2"	23	60	11
PC1217-13-M016-BYNV-E	9	17	13,6	9	M16x1,5	23	60	12
PC1217-20-G012-BYNV-E	16	27	20	16	G1/2"	32	79	12

PC1219 INNESTO RAPIDO CON FILETTO FEMMINA BSPP
BSPP FEMALE THREAD SOCKET

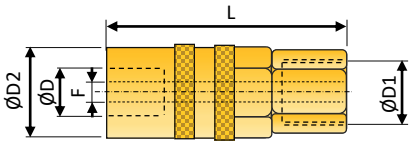

Codice-Code	misura size	CH	D	F	D1	D2	L	L1
Senza valvola - without valve								
PC1219-09-G018-BXNV-E	6	17	9,5	6	G1/8"	17	40	-
PC1219-09-G014-BXNV-E	6	17	9,5	6	G1/4"	17	42	-
PC1219-09-G038-BXNV-E	6	17	9,5	6	G3/8"	17	43	-
PC1219-09-M014-BXNV-E	6	17	9,5	6	M14x1,5	17	42	-
PC1219-13-G014-BXNV-E	9	17	13,6	6	G1/4"	23	52	-
PC1219-13-G038-BXNV-E	9	19	13,6	9	G3/8"	23	52	-
PC1219-13-G012-BXNV-E	9	24	13,6	9	G1/2"	23	57	-
PC1219-20-G012-BXNV-E	16	27	20	16	G1/2"	32	74,5	-
PC1219-20-G034-BXNV-E	16	30	20	16	G3/4"	32	76,5	-
Con valvola - with valve								
PC1219-09-G018-BYNV-E	6	17	9,5	6	G1/8"	17	40	-
PC1219-09-G014-BYNV-E	6	17	9,5	6	G1/4"	17	42	-
PC1219-09-G038-BYNV-E	6	17	9,5	6	G3/8"	17	43	-
PC1219-09-M014-BYNV-E	6	17	9,5	6	M14x1,5	17	42	-
PC1219-13-G014-BYNV-E	9	17	13,6	6	G1/4"	23	52	-
PC1219-13-G038-BYNV-E	9	19	13,6	9	G3/8"	23	52	-
PC1219-13-G012-BYNV-E	9	24	13,6	9	G1/2"	23	57	-
PC1219-20-G012-BYNV-E	16	27	20	16	G1/2"	32	74,5	-
PC1219-20-G034-BYNV-E	16	30	20	16	G3/4"	32	76,5	-

PC1231 INNESTO RAPIDO PER PONTE – BRIDGE SOCKET

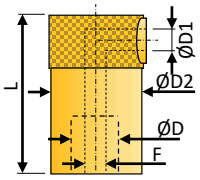

Codice-Code	misura size	D	F	D1	D2	L	L1
Senza valvola - without							
PC1231-09-08-BXNV-E	6	9,5	6	8	17	41	-
PC1231-13-08-BXNV-E	9	13,6	6	8	23	41	-
PC1231-20-14-BXNV-E	16	20	12	14	32	55	-
Con valvola - with valve							
PC1231-09-08-BYNV-E	6	9,5	6	8	17	125	41
PC1231-13-08-BYNV-E	9	13,6	6	8	23	125	41
PC1231-20-14-BYNV-E	16	20	12	14	32	125	55

PC1290 TUBO LISCIO PER PONTE STRAIGHT TUBE FOR BRIDGE

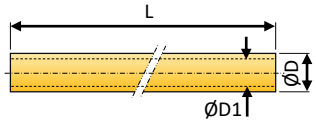

PC1290-08-06-250-B-E	-	8	-	6	-	250	-
PC1290-08-06-500-B-E	-	8	-	6	-	500	-
PC1290-10-08-250-B-E	-	10	-	8	-	250	-
PC1290-10-08-500-B-E	-	10	-	8	-	500	-
PC1290-14-10-500-B-E	-	14	-	12	-	500	-

PC1225 ADATTATORE MASCHIO – FEMMINA INNESTO RAPIDO MALE PLUG – FEMALE SOCKET ADAPTER

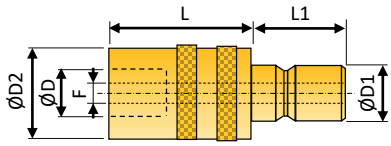

Codice-Code	misura size	D	F	D1	D2	L	L1
Senza valvola - without valve							
PC1225-09-13-BXNV-E	6	9,5	6	13,5	17	27,5	16
PC1225-13-09-BXNV-E	9	13,6	9	9,4	23	36	15
Con valvola - with valve							
PC1225-09-13-BYNV-E	6	9,5	6	13,5	17	27,5	16
PC1225-13-09-BYNV-E	9	13,6	9	9,4	23	36	15

PC1227 ADATTATORE MASCHIO EU. – INNESTO RAPIDO INTERNAZ. BRASS EU MALE – INTERNAT. FEMALE ADAPTER SOCKET

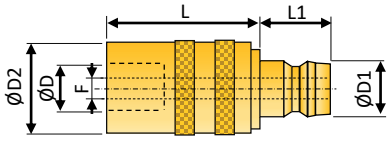

Codice-Code	misura size	D	F	D1	D2	L	L1
Senza valvola - without valve							
PC1227-09-13-BXNV-E	6	9,5	6	13	17	27,5	14
PC1227-13-13-BXNV-E	9	13,6	9	13	23	36	14
Con valvola - with valve							
PC1227-09-13-BYNV-E	6	9,5	6	13	17	27,5	14
PC1227-13-13-BYNV-E	9	13,6	9	13	23	36	14

PC1229 INNESTO CIECO – BLIND SOCKET

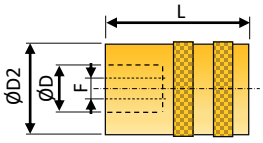

Codice-Code	misura size	D	F	D1	D2	L	L1
Senza valvola - without valve							
PC1229-09-BXNV-E	6	9,5	-	-	17	27	-
PC1229-13-BXNV-E	9	13,6	-	-	23	35	-

PC1202 NIPPLO CON PORTAGOMMA EASY-LOCK
EASY-LOCK HOSE STEM PLUG

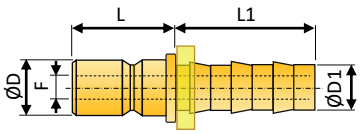

Codice-Code	misura size	CH	D	F	D1	L	L1
Senza valvola - without valve							
PC1202-09-10-B-E	6	-	9,4	5	9,5	14	24
PC1202-09-13-B-E	6	-	9,4	6	12,7	14	24
PC1202-13-10-B-E	9	-	13,5	8	9,5	21	24
PC1202-13-13-B-E	9	-	13,5	9	12,7	21	28
PC1202-20-13-B-E	16	-	19,8	9	12,7	23	28
PC1202-20-19-B-E	16	-	19,8	15	19	23	38

PC1204 NIPPLO CON PORTAGOMMA STANDARD
STANDARD HOSE STEM PLUG

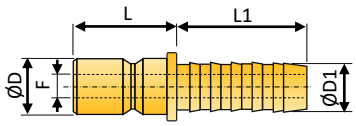

Codice-Code	misura size	CH	D	F	D1	L	L1
Senza valvola - without valve							
PC1204-09-06-B-E	6	-	9,4	4	6	14	23
PC1204-09-09-B-E	6	-	9,4	7	9	14	23
PC1204-09-10-B-E	6	-	9,4	8	10	14	23
PC1204-13-06-B-E	9	-	13,5	4	6	20	24
PC1204-13-09-B-E	9	-	13,5	7	9	20	24
PC1204-13-10-B-E	9	-	13,5	8	10	20	24
PC1204-13-13-B-E	9	-	13,5	9	13	20	24
PC1204-20-16-B-E	16	-	19,8	13	16	23	27
PC1204-20-19-B-E	16	-	19,8	15	19	23	27

PC1214 NIPPLO FILETTO MASCHIO CILINDRICO (CONO DIN 3863)
PARALLEL MALE THREAD PLUG (INNER CONE DIN 3863)

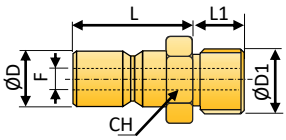

Codice-Code	misura size	CH	D	F	D1	L	L1
Senza valvola - without valve							
PC1214-09-G018-B-E	6	13	9,4	6	G1/8"	17	7
PC1214-09-G014-B-E	6	16	9,4	6	G1/4"	19	8
PC1214-09-G038-B-E	6	19	9,4	6	G3/8"	21	10
PC1214-09-M010-B-E	6	11	9,4	6	M10x1,5	17	7
PC1214-09-M014-B-E	6	14	9,4	6	M14x1,5	19	8
PC1214-13-G018-B-E	9	14	13,5	9	G1/8"	25	9
PC1214-13-G014-B-E	9	14	13,5	9	G1/4"	25	11
PC1214-13-G038-B-E	9	17	13,5	9	G3/8"	26	12
PC1214-13-G012-B-E	9	22	13,5	9	G1/2"	26	14
PC1214-13-M014-B-E	9	14	13,5	9	M14x1,5	25	11
PC1214-20-G014-B-E	16	21	19,8	9	G1/4"	24,5	11
PC1214-20-G038-B-E	16	21	19,8	13	G3/8"	24,5	12
PC1214-20-G012-B-E	16	22	19,8	15	G1/2"	24,5	14
PC1214-20-G034-B-E	16	27	19,8	15	G3/4"	25,5	16
Con valvola - with valve							
PC1214-09-G014-BYV-E	6	13	9,4	6	G1/4"	17	7
PC1214-09-G038-BYV-E	6	16	9,4	6	G3/8"	19	8
PC1214-13-G014-BYV-E	9	16	13,5	9	G1/4"	25	8
PC1214-13-G038-BYV-E	9	19	13,5	9	G3/8"	26	8
PC1214-13-G012-BYV-E	9	22	13,5	9	G1/2"	26	14
PC1214-20-G012-BYV-E	16	22	19,8	15	G1/2"	28	14
PC1214-20-G034-BYV-E	16	27	19,8	15	G3/4"	32	16

PC1222 NIPPLO FILETTO MASCHIO BSPT CON TEFLON
BSPT MALE THREAD TAPERED PLUG

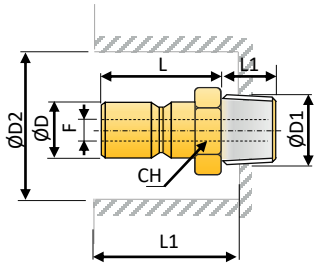

	Codice-Code	misura size	CH	D	F	D1	L	L1	L2
	Senza valvola - without valve								
stock	PC1222-09-R018-B-E	6	13	9,4	6	R1/8"	17	7	-
stock	PC1222-09-R014-B-E	6	16	9,4	6	R1/4"	19	8	-
	PC1222-09-R038-B-E	6	19	9,4	6	R3/8"	21	10	-
stock	PC1222-13-R014-B-E	9	16	13,5	9	R1/4"	25	11	-
stock	PC1222-13-R038-B-E	9	19	13,5	9	R3/8"	26	12	-
	PC1222-13-R012-B-E	9	24	13,5	9	R1/2"	26	14	-
	PC1222-20-R014-B-E	16	21	19,8	9	R1/4"	24,5	11	-
	PC1222-20-R038-B-E	16	21	19,8	13	R3/8"	24,5	12	-
	PC1222-20-R012-B-E	16	22	19,8	15	R1/2"	24,5	14	-
	PC1222-20-R034-B-E	16	29	19,8	15	R3/4"	25,5	16	-
	Con valvola - with valve								
	PC1222-09-R014-BYV-E	6	16	9,4	6	R1/4"	17	7	-
	PC1222-09-R038-BYV-E	6	19	9,4	6	R3/8"	19	8	-
	PC1222-13-R014-BYV-E	9	16	13,5	9	R1/4"	25	8	-
	PC1222-13-R038-BYV-E	9	19	13,5	9	R3/8"	26	8	-
	PC1222-13-R012-BYV-E	9	24	13,5	9	R1/2"	26	14	-
	PC1222-20-R012-BYV-E	16	22	19,8	15	R1/2"	28	14	-
	PC1222-20-R034-BYV-E	16	29	19,8	15	R3/4"	32	16	-

PC1226 NIPPLO FILETTO MASCHIO BSPT 90°
BSPT 90° MALE THREAD PLUG

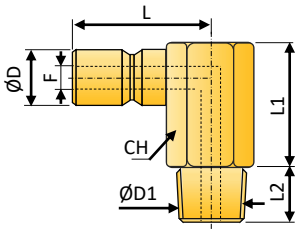

	Codice-Code	misura size	CH	D	F	D1	L	L1	L2
	Senza valvola - without valve								
	PC1226-09-R018-B-E	6	11	9,4	6	R1/8"	23	16	11
stock	PC1226-09-R014-B-E	6	11	9,4	6	R1/4"	23	16	11
	PC1226-09-R038-B-E	6	15	9,4	6	R3/8"	23	23	11
	PC1226-09-M010-B-E	6	17	9,4	6	M10x1	23	23	11
	PC1226-09-M014-B-E	6	17	9,4	6	M14x1,5	23	23	11
stock	PC1226-13-R014-B-E	9	15	13,5	9	R1/4"	24	22	12
stock	PC1226-13-R038-B-E	9	17	13,5	9	R3/8"	24	22	12

PC1230 NIPPLO FILETTO FEMMINA BSPP
BSPP FEMALE THREAD PLUG

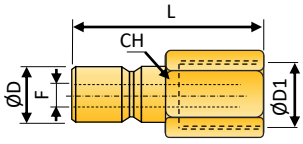

Codice-Code	misura size	CH	D	F	D1	L	L1	L2
Senza valvola - without valve								
PC1230-09-G018-B-E	6	13	9,4	6	G1/8"	26	-	-
PC1230-09-G014-B-E	6	16	9,4	6	G1/4"	26	-	-
PC1230-09-G038-B-E	6	19	9,4	6	G3/8"	26	-	-
PC1230-13-G014-B-E	9	16	13,5	9	G1/4"	37	-	-
PC1230-13-G038-B-E	9	19	13,5	9	G3/8"	39	-	-
PC1230-20-G012-B-E	16	24	19,8	15	G1/2"	35	-	-

PC1232 NIPPLO CIECO - BLIND PLUG

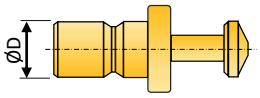

Codice-Code	misura size	CH	D	F	D1	L	L1	L2
PC1232-09-B-E	6	-	9,4	-	-	-	-	-
PC1232-13-B-E	9	-	13,5	-	-	-	-	-
PC1232-20-B-E	16	-	19,8	-	-	-	-	-

PC1234 NIPPLO PROLUNGATO LISCIO
EXTENDED STRAIGHT TUBE PLUG

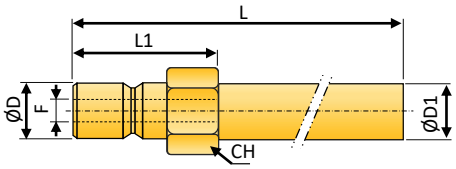

	Codice-Code	misura size	CH	D	F	D1	L	L1	L2
	PC1234-09-10-B-063-E	6	11	9,4	6	10	63	17	-
stock	PC1234-09-10-B-100-E	6	11	9,4	6	10	100	17	-
	PC1234-09-10-B-120-E	6	11	9,4	6	10	120	17	-
	PC1234-09-10-B-240-E	6	11	9,4	6	10	240	17	-
	PC1234-09-10-B-360-E	6	11	9,4	6	10	360	17	-
stock	PC1234-13-14-B-150-E	9	15	13,5	9	14	150	23	-
stock	PC1234-13-14-B-300-E	9	15	13,5	9	14	300	23	-
	PC1234-13-14-B-450-E	9	15	13,5	9	14	450	23	-
	PC1234-20-14-B-500-E	16	22	19,8	15	21	500	33	-
	PC1234-20-14-B-800-E	16	22	19,8	15	21	800	33	-

PC1238 NIPPLO PROLUNGATO ESTREMITA' FILETTO MASCHIO BSPT
EXTENDED STRAIGHT TUBE AND BSPT MALE THREAD PLUG

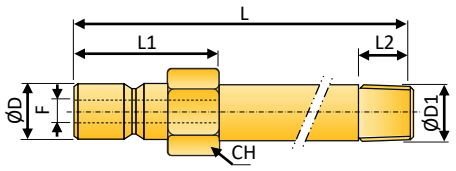

Codice-Code	misura size	CH	D	F	D1	L	L1	L2
PC1238-09-R018-B-100-E	6	11	9,4	6	R1/8"	100	17	7
PC1238-09-R018-B-150-E	6	11	9,4	6	R1/8"	150	17	7
PC1238-09-R018-B-200-E	6	11	9,4	6	R1/8"	200	17	7
PC1238-09-R014-B-100-E	6	14	9,4	6	R1/4"	100	17	9
PC1238-09-R014-B-150-E	6	14	9,4	6	R1/4"	150	17	9
PC1238-09-R014-B-200-E	6	14	9,4	6	R1/4"	200	17	9
PC1238-09-R014-B-250-E	6	14	9,4	6	R1/4"	250	17	9
PC1238-09-M010-B-100-E	6	11	9,4	6	M10x1	100	17	9
PC1238-13-R014-B-100-E	9	15	13,5	9	R1/4"	100	23	9
PC1238-13-R014-B-150-E	9	15	13,5	9	R1/4"	150	23	9
PC1238-13-R014-B-200-E	9	15	13,5	9	R1/4"	200	23	9
PC1238-13-R014-B-250-E	9	15	13,5	9	R1/4"	250	23	9
PC1238-13-R038-B-100-E	9	17	13,5	9	R3/8"	100	23	9
PC1238-13-R038-B-150-E	9	17	13,5	9	R3/8"	150	23	9
PC1238-13-R038-B-200-E	9	17	13,5	9	R3/8"	200	23	9
PC1238-13-R038-B-250-E	9	17	13,5	9	R3/8"	250	23	9
PC1238-13-R012-B-100-E	9	22	13,5	9	R1/2"	100	23	9
PC1238-13-M014-B-100-E	9	17	13,5	9	M14x1,	100	23	9

PC1300

Innesti rapidi serie Francese, intercambiabili con altri marchi con la stessa denominazione o profilo.

French Standard Quick couplings. Fully interchangeable with other brands with the same plug profile.

CARATTERISTICHE DI FUNZIONAMENTO – TECHNICAL FEATURES

Range di temperatura di esercizio:	acqua -5\+150°C; olio diatermico -5°C / +180°C con guarnizioni standard FKM
Pressione max. di esercizio:	16 Bar
Working temperature range:	water -5°\+150°C; diathermic oil -5°C / +180°C with FKM standard seals
Max. working pressure:	16 Bar

Diametri e passaggio flusso:
Size and flow size:

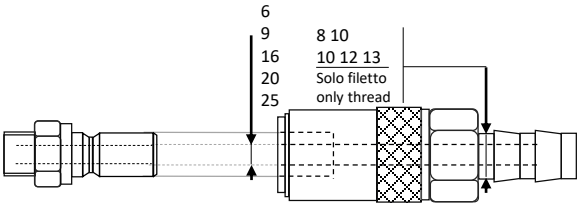

CARATTERISTICHE COSTRUTTIVE – CONSTRUCTION FEATURES

Corpo – Socket Body	Ottone – Brass
Ghiera – Sleeve	Acciaio Inox – Stainless Steel
Valvola – Valve	Ottone-Brass
Molle – Springs	Acciaio Inox – Stainless Steel
Sfere – Balls	Acciaio Inox – Stainless Steel
Nipplo – Nipple	Ottone per ØF fino a 16. Acciaio inox da ØF 20 in su – Brass for ØF up to 16. Stainless steel for ØF 20 and higher
O-Rings	FKM

OPTIONALS

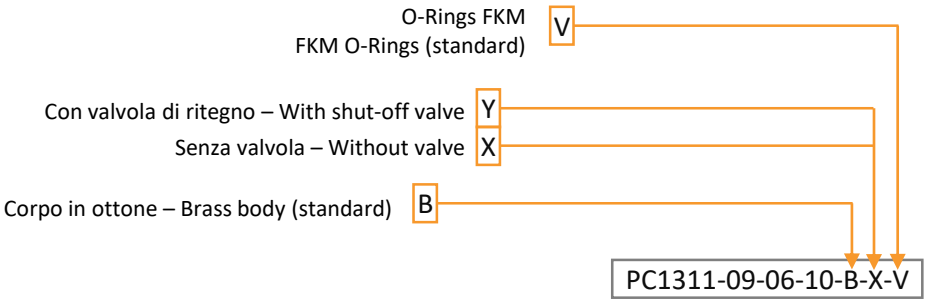

PC1301 INNESTO RAPIDO CON PORTA-GOMMA EASY-LOCK
EASY-LOCK HOSE STEM SOCKET

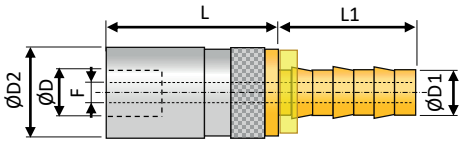

Codice-Code	misura size	D	D1	D2	F	L	L1
Senza valvola - without valve							
PC1301-06-10-BXNV	6	9,5	9,5	19	6	36	24
PC1301-09-10-BXNV	9	14	9,5	25	9	41,5	24
PC1301-09-13-BXNV	9	18	12,7	25	12	41,5	28
PC1301-12-13-BXNV	12	18	12,7	31	12	54	38
PC1301-16-16-BXNV	16	22	16	38	12	54	38
PC1301-16-19-BXNV	16	22	19	38	12	54	38
Con valvola - with valve							
PC1301-06-10-BYNV	6	9,5	9,5	19	6	36	24
PC1301-09-10-BYNV	9	14	9,5	25	9	41,5	24
PC1301-09-13-BYNV	9	18	12,7	25	12	41,5	28
PC1301-12-13-BYNV	12	18	12,7	31	12	54	38
PC1301-12-13-BYNV	16	22	16	38	12	54	38
PC1301-12-16-BYNV	16	22	19	38	12	54	38

PC1303 INNESTO RAPIDO CON PORTA-GOMMA STANDARD
STANDARD HOSE STEM SOCKET

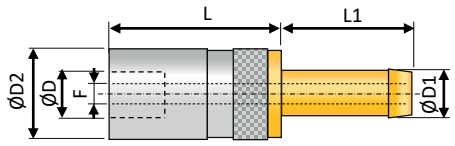

Codice-Code	misura size	D	D1	D2	F	L	L1
Senza valvola - without valve							
PC1303-06-08-BXNV	6	9,5	8	19	6	37	23
PC1303-09-12-BXNV	9	14	12	25	9	41,5	28
PC1303-12-16-BXNV	12	18	16	31	12	54	28
PC1303-16-19-BXNV	16	22	19	38	16	81	33
Con valvola - with valve							
PC1303-06-08-BYNV	6	9,5	8	19	6	37	23
PC1303-09-12-BYNV	9	14	12	25	9	41,5	28
PC1303-12-16-BYNV	12	18	16	31	12	54	28
PC1303-16-19-BYNV	16	22	19	38	16	81	33

PC1307 INNESTO RAPIDO CON PORTA-GOMMA STANDARD 45°
45° STANDARD HOSE STEM SOCKET

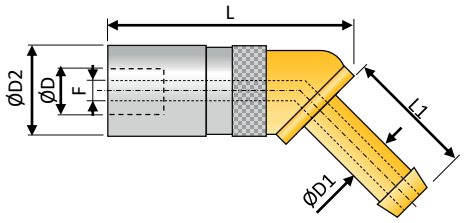

Codice-Code	misura size	D	D1	D2	F	L	L1
Senza valvola - without valve							
PC1307-06-08-BXNV	6	9,5	8	19	6	36	23
Con valvola - with valve							
PC1307-06-08-BYNV	6	9,5	8	19	6	36	23

PC1311 INNESTO RAPIDO CON PORTA-GOMMA STANDARD 90°
WITH 90° STANDARD HOSE STEM SOCKET

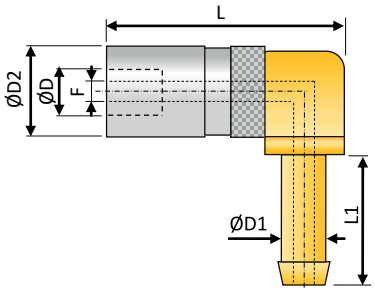

Codice-Code	misura size	D	D1	D2	F	L	L1
Senza valvola - without valve							
PC1311-06-08-BXNV	6	9,5	8	19	6	36	23
PC1311-09-10-BXNV	9	14	10	25	9	32	28
PC1311-09-12-BXNV	9	14	12	25	9	37	28
PC1311-12-16-BXNV	12	18	16	31	12	54	28
PC1311-16-19-BXNV	16	22	19	38	16	72	60
Con valvola - with valve							
PC1311-06-08-BYNV	6	9,5	8	19	6	36	23
PC1311-09-10-BYNV	9	14	10	25	9	32	28
PC1311-09-12-BYNV	9	14	12	25	9	37	28
PC1311-12-16-BYNV	12	18	16	31	12	54	28
PC1311-16-19-BYNV	16	22	19	38	16	72	60

PC1313 INNESTO RAPIDO CON FILETTO MASCHIO BSPP ED O-RING
BSPP MALE THREAD SOCKET WITH O-RING

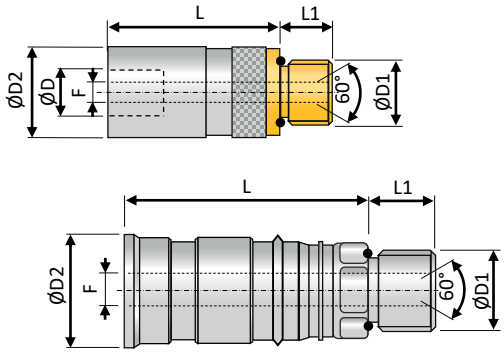

Codice-Code	misura size	D	D1	D2	F	L	L1	CH
Senza valvola - without valve								
PC1313-06-G014-BXNV	6	9,5	G1/4"	19	6	43	10	17
PC1313-09-G038-BXNV	9	13,8	G3/8"	25	9	49	11	22
PC1313-12-G012-BXNV	12	17,8	G1/2"	31	12	58	14	27
PC1313-16-G034-BXNV	16	22,4	G3/4"	38	16	97,5	14	32
Con valvola - with valve								
PC1313-06-G014-BYNV	6	9,5	G1/4"	19	6	43	10	17
PC1313-09-G038-BYNV	9	12,4	G3/8"	25	9	49	11	22
PC1313-12-G012-BYNV	12	16,6	G1/2"	31	12	58	14	27
PC1313-16-G034-BYNV	16	22,4	G3/4"	38	16	97,5	14	32
PC1313-20-G100-BYNV	20	28	G1"	53	20	112	20	42
PC1313-25-G100-BYNV	25	36	G1"	60	25	143	21	50
PC1313-25-G114-BYNV	25	36	G1"1/4	60	25	146	21	50

PC1317 INNESTO RAPIDO CON FILETTO MASCHIO BSPP 90°
BSPP 90° MALE THREAD SOCKET

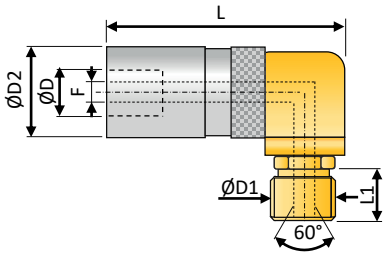

Codice-Code	misura size	D	D1	D2	F	L	L1	CH
Senza valvola - without valve								
PC1317-06-G014-BXNV	6	9,5	G1/4"	19	6	58	11	17
PC1317-09-G038-BXNV	9	13,8	G3/8"	25	9	66,5	12	21
PC1317-12-G012-BXNV	12	17,8	G1/2"	31	12	81,5	14	27
PC1317-16-G034-BXNV	16	22,4	G3/4"	38	16	121	18	32
Con valvola - with valve								
PC1317-06-G014-BYNV	6	9,5	G1/4"	19	6	58	11	17
PC1317-09-G038-BYNV	9	13,8	G3/8"	25	9	66,5	12	21
PC1317-12-G012-BYNV	12	17,8	G1/2"	31	12	81,5	14	27
PC1317-16-G034-BYNV	16	22,4	G3/4"	38	16	121	18	32

PC1319 INNESTO RAPIDO CON FILETTO FEMMINA BSPP
BSPP FEMALE THREAD SOCKET

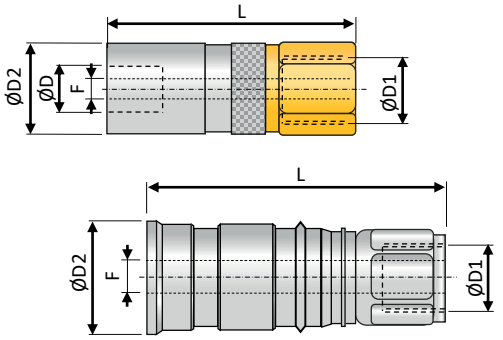

Codice-Code	misura size	D	D1	D2	F	L	L1	CH
Senza valvola - without valve								
PC1319-06-G014-BXNV	6	9,5	G1/4"	19	6	46	-	17
PC1319-09-G038-BXNV	9	13,8	G3/8"	25	9	53	-	22
PC1319-12-G012-BXNV	12	17,8	G1/2"	31	12	67	-	27
PC1319-16-G034-BXNV	16	22,4	G3/4"	38	16	55	-	35
Con valvola - with valve								
PC1319-06-G014-BYNV	6	9,5	G1/4"	19	6	46	-	17
PC1319-09-G038-BYNV	9	13,8	G3/8"	25	9	53	-	22
PC1319-12-G012-BYNV	12	17,8	G1/2"	31	12	67	-	27
PC1319-16-G034-BYNV	16	22,4	G3/4"	38	16	90,5	-	35
PC1319-20-G100-BYNV	20	28	G1"	53	20	120	-	53
PC1319-25-G114-BYNV	25	36	G1"1/4	60	25	140	-	60

PC1318 NIPPLO FILETTO MASCHIO BSPP CON O-RING
BSPP MALE THREAD PLUG WITH O-RING

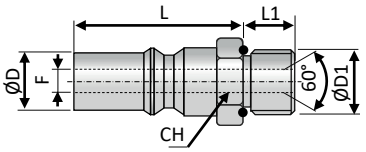

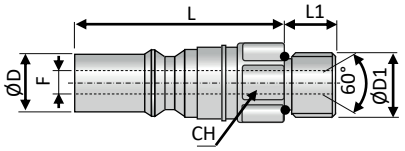

Codice-Code	misura size	D	D1	F	L	L1	CH
Con valvola - with valve							
PC1318-06-G018-BYV	6	9,5	G1/8"	6	38	7	17
PC1318-06-G014-BYV	6	9,5	G1/4"	6	36	9	17
PC1318-09-G014-BYV	9	14	G1/4"	9	42	9	19
PC1318-09-G038-BYV	9	14	G3/8"	9	38	10	20
PC1318-12-G038-BYV	12	18	G3/8"	12	53,5	10	24
PC1318-12-G012-BYV	12	18	G1/2"	12	50	12	24
PC1318-16-G034-BYV	16	22	G3/4"	16	67	14	32
PC1318-20-G100-BYV	20	28	G1"	20	120	20	42
PC1318-25-G100-BYV	25	36	G1"	25	127	20	42
PC1318-25-G114-BYV	25	36	G1"1/14	25	131,5	21	42

PC1322 NIPPLO FILETTO MASCHIO BSPT
BSPT MALE THREAD PLUG

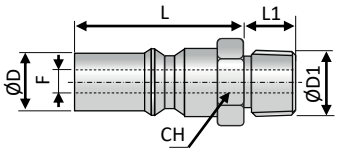

Codice-Code	misura size	D	D1	F	L	L1	CH
Con valvola - with valve							
PC1322-06-R018-BYV	6	9,5	R1/8"	6	38	7	17
PC1322-06-R014-BYV	6	9,5	R1/4"	6	36	9	17
PC1322-09-R014-BYV	9	14	R1/4"	9	42	9	19
PC1322-09-R038-BYV	9	14	R3/8"	9	38	10	20
PC1322-12-R038-BYV	12	18	R3/8"	12	53,5	10	24
PC1322-12-R012-BYV	12	18	R1/2"	12	50	12	24
PC1322-16-R034-BYV	16	22	R3/4"	16	67	14	32

PC1324 NIPPLO FILETTO MASCHIO BSPT CHIAVE ESAGONO INTERNO
BSPT MALE THREAD PLUG WITH INTERNAL HEXAGON

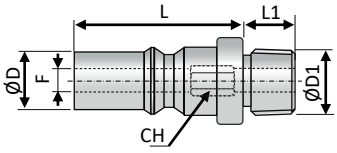

Codice-Code	misura size	D	D1	F	L	L1	CH
Senza valvola - without valve							
PC1324-06-R018-B	6	9,5	R1/8"	6	21	7,5	5
PC1324-06-R014-B	6	9,5	R1/4"	6	22	13	5
PC1324-09-R014-B	9	14	R1/4"	9	21	13	8
PC1324-09-R038-B	9	14	R3/8"	9	21	11	8
PC1324-12-R038-B	12	18	R3/8"	12	26	11	10

PC1330 NIPPLO FILETTO FEMMINA BSPP
BSPP FEMALE THREAD PLUG

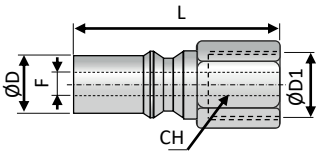

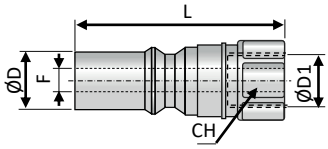

Codice-Code	misura size	D	D1	F	L	L1	CH
Senza valvola - without valve							
PC1330-06-G014-B	6	9,5	G1/4"	6	34	-	17
PC1330-09-G038-B	9	14	G3/8"	9	37	-	22
PC1330-12-G012-B	12	18	G1/2"	12	45	-	27
PC1330-16-G034-B	16	22	G3/4"	16	58	-	32
PC1330-20-G100-B	20	18	G1"	20	92	-	41
PC1330-25-G112-B	25	22	G1"1/2"	25	105	-	50
Con valvola - with valve							
PC1330-06-G014-BYV	6	9,5	G1/4"	6	47	-	17
PC1330-09-G038-BYV	9	14	G3/8"	9	48,5	-	19
PC1330-12-G012-BYV	12	18	G1/2"	12	49	-	27
PC1330-16-G034-BYV	16	22	G3/4"	16	81	-	32
PC1330-20-G100-BYV	20	18	G1"	20	126,5	-	42
PC1330-25-G112-BYV	25	22	G1"1/2"	25	158	-	50

PC1302 NIPPLO CON PORTAGOMMA EASY-LOCK
EASY-LOCK HOSE STEM PLUG

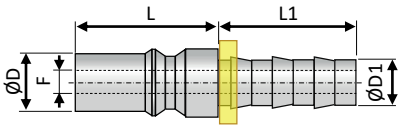

Codice-Code	misura size	D	D1	F	L	L1	CH
Senza valvola - without valve							
PC1302-06-10-B	6	9,5	9,5	6	45	24	-
PC1302-09-10-B	9	14	9,5	9	46,5	24	-
PC1302-09-13-B	9	14	12,7	9	50,5	28	-
PC1302-12-16-B	12	18	16	12	67	28	-
PC1302-16-19-B	16	22	19	16	75	38	-

PC1304 NIPPLO CON PORTAGOMMA STANDARD
STANDARD HOSE STEM PLUG

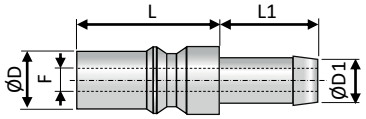

Codice-Code	misura size	D	D1	F	L	L1	CH
Senza valvola - without valve							
PC1304-06-08-B	6	9,5	8	6	24,5	23	-
PC1304-09-12-B	9	14	12	9	25,5	27,5	-
PC1304-12-16-B	12	18	16	12	30	33	-
PC1304-16-19-B	16	22	19	16	37	33	-

PC1400

Innesti rapidi **con valvola a faccia-piatta**, standard Francese, intercambiabili con altri marchi con la stessa denominazione o profilo.

Flat-face valve quick couplings, French standard. Fully interchangeable with other brands with the same plug profile.

CARATTERISTICHE DI FUNZIONAMENTO – TECHNICAL FEATURES

Range di temperatura di esercizio:	acqua -5°C / +150°C; olio diatermico -5°C / +180°C con guarnizioni standard FKM
Pressione max. di esercizio:	50 Bar
Working temperature range:	water -5°C / +150°C; diathermic oil -5°C / +180°C with standard FKM seals
Max. working pressure:	50 Bar

Diametri e passaggio flusso:
Size and flow size:

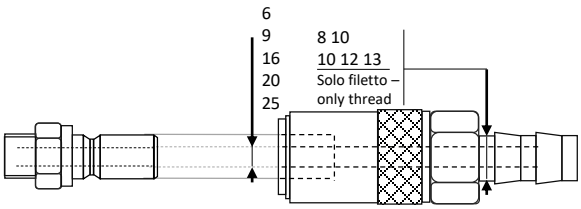

CARATTERISTICHE COSTRUTTIVE – CONSTRUCTION FEATURES

Corpo – Socket Body	Ottone – Brass
Ghiera – Sleeve	Acciaio Inox – Stainless Steel
Valvola – Valve	Ottone – Brass
Molle – Springs	Acciaio Inox – Stainless Steel
Sfere – Balls	Acciaio Inox – Stainless Steel
Nipplo – Nipple	Ottone – Brass
O-Rings	FKM

OPTIONALS

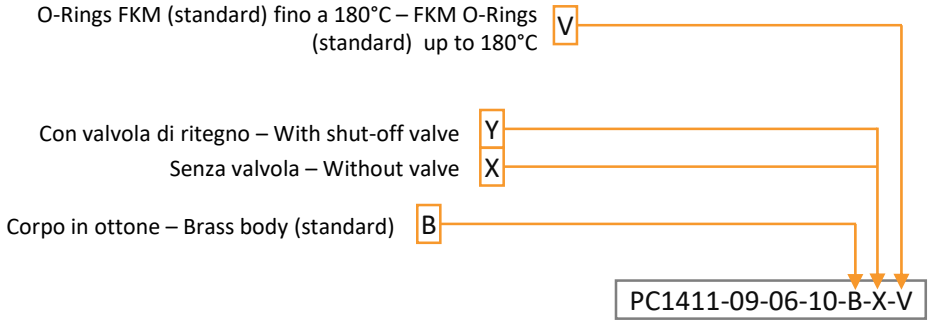

PC1401 INNESTO RAPIDO CON PORTA-GOMMA EASY-LOCK
EASY-LOCK HOSE STEM SOCKET

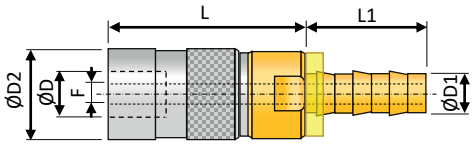

Codice-Code	misura size	D1	D2	F	L	L1	L2
Con valvola - with valve							
PC1401-06-10-BYNV	6	10	22	6	50,5	24	-
PC1401-09-13-BYNV	9	13	28	9	91	24	-

PC1403 INNESTO RAPIDO CON PORTA-GOMMA STANDARD
STANDARD HOSE STEM SOCKET

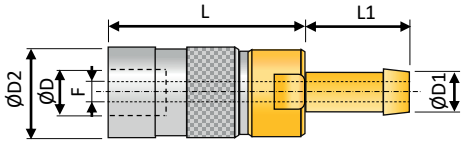

Codice-Code	misura size	D1	D2	F	L	L1	L2
Con valvola - with valve							
PC1403-06-10-BYNV	6	10	22	6	50,5	28	-
PC1403-09-13-BYNV	9	13	28	9	91	28	-

PC1409 INNESTO RAPIDO CON PORTA-GOMMA EASY-LOCK 90°
90° EASY-LOCK HOSE STEM SOCKET

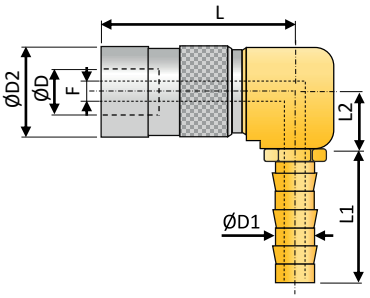

Codice-Code	misura size	D1	D2	F	L	L1	L2
Con valvola - with valve							
PC1409-06-10-BYNV	6	10	22	6	55,5	24	30,5
PC1409-09-13-BYNV	9	13	28	9	57	28	38,5

PC1411 INNESTO RAPIDO CON PORTA-GOMMA STANDARD 90°
WITH 90° STANDARD HOSE STEM SOCKET

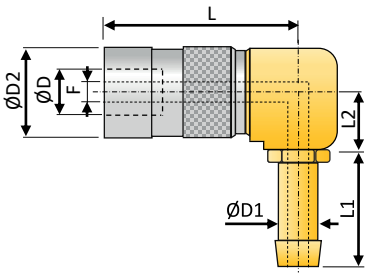

Codice-Code	misura size	D1	D2	F	L	L1	L2
Con valvola - with valve							
PC1411-06-10-BYNV	6	10	22	6	55,5	28	30,5
PC1411-09-13-BYNV	9	13	28	9	57	28	38,5

PC1413 INNESTO RAPIDO FILETTO MASCHIO BSPP ED O-RING
BSPP MALE THREAD SOCKET WITH O-RING

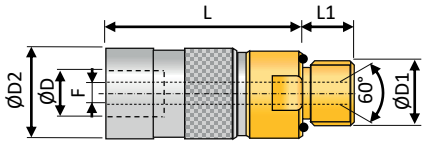

Codice-Code	misura size	CH	D1	D2	F	L	L1	L2
Con valvola - with valve								
PC1413-06-G014-BYNV	6	20	G1/4"	22	6	48	11	-
PC1413-09-G038-BYNV	9	24	G3/8"	28	9	68	12	-
PC1413-09-G012-BYNV	9	24	G1/2"	28	9	70	14	-
PC1413-12-M020-BYNV	12	24	M20x1	28	12	70	14	-

PC1417 INNESTO RAPIDO CON FILETTO MASCHIO BSPP 90°
BSPP 90° MALE THREAD SOCKET

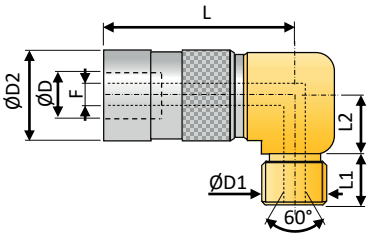

Codice-Code	misura size	CH	D1	D2	F	L	L1	L2
Con valvola - with valve								
PC1417-06-G014-BYNV	6	-	G1/4"	22	6	49	11	13
PC1417-09-G038-BYNV	9	-	G3/8"	28	9	74,5	12	19,5

PC1419 INNESTO RAPIDO CON FILETTO FEMMINA BSPP
BSPP FEMALE THREAD SOCKET

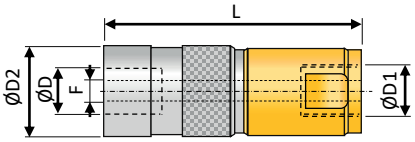

Codice-Code	misura size	CH	D1	D2	F	L	L1	L2
Con valvola - with valve								
PC1419-06-G014-BYNV	6	20	G1/4"	22	6	61	-	-
PC1419-09-G038-BYNV	9	24	G3/8"	28	9	75,5	-	-
PC1419-12-G012-BYNV	12	27	G1/2"	44	12	103	-	-

PC1423 INNESTO RAPIDO CON FILETTO FEMMINA BSPP 90°
BSPP 90° FEMALE THREAD SOCKET

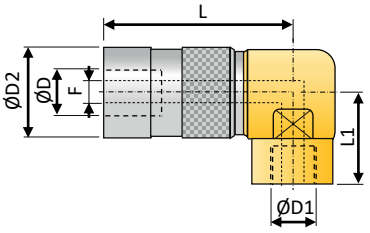

Codice-Code	misura size	CH	D1	D2	F	L	L1	L2
Con valvola - with valve								
PC1423-06-G014-BYNV	6	-	G1/4"	22	6	49	24	-
PC1423-09-G038-BYNV	9	-	G3/8"	28	9	74,5	32	-

PC1418 NIPPLO FILETTO MASCHIO BSPP CON O-RING
BSPP MALE THREAD PLUG WITH O-RING

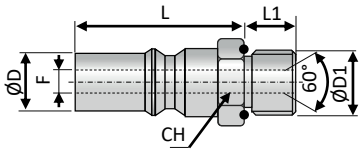

Codice-Code	misura size	CH	D1	F	L	L1	L2
Con valvola - with valve							
PC1418-06-G014-BYV	6	17	G1/4"	6	44	11	-
PC1418-06-G038-BYV	6	17	G3/8"	6	42,5	12	-
PC1418-09-G038-BYV	9	30	G3/8"	9	56	12	-
PC1418-12-G012-BYV	12	30	G1/2"	12	71	14	-

PC1422 NIPPLO FILETTO MASCHIO BSPT
BSPT MALE THREAD PLUG

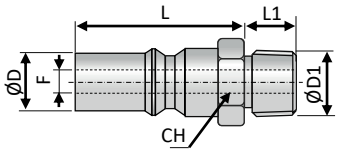

Codice-Code	misura size	CH	D1	F	L	L1	L2
Con valvola - with valve							
PC1422-06-R014-BYV	6	17	R1/4"	6	40	12	-
PC1422-09-R038-BYV	9	23	R3/8"	9	56	14	-
PC1422-12-R012-BYV	12	30	R1/2"	12	74	15	-

PC1430 NIPPLO FILETTO FEMMINA BSPP
BSPP FEMALE THREAD PLUG

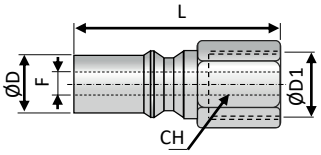

Codice-Code	misura size	CH	D1	F	L	L1	L2
Con valvola - with valve							
PC1430-06-G014-BYV	6	17	G1/4"	6	55	-	-
PC1430-09-G038-BYV	9	23	G3/8"	9	71	-	-
PC1430-12-G012-BYV	12	30	G1/2"	12	90	-	-

PC1428 NIPPLO FILETTO MASCHIO BSPP 90°
90° BSPP MALE THREAD PLUG

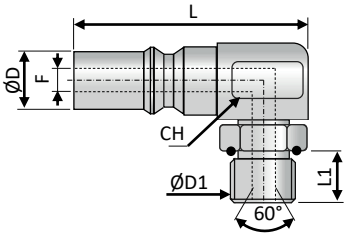

Codice-Code	misura size	CH	D1	F	L	L1	L2
Con valvola - with valve							
PC1428-06-G014-BYV	6	17	G1/4"	6	50	11	24

PC1500

Innesti rapidi standard Francese, intercambiabili con altri marchi con la stessa denominazione o profilo.

French standard quick coupling. Fully interchangeable with other brands with the same plug profile.

CARATTERISTICHE DI FUNZIONAMENTO – TECHNICAL FEATURES

Range di temperatura di esercizio:	-20\+100°C con O-Rings standard NBR. 160°C con O-Rings FKM (optional)
Pressione max. di esercizio:	10 Bar
Working temperature range:	-20\+100°C with NBR standard O-Rings. 160°C with FKM O-Rings (optional)
Max. working pressure:	10 Bar

Diametri e passaggio flusso:
Size and flow size:

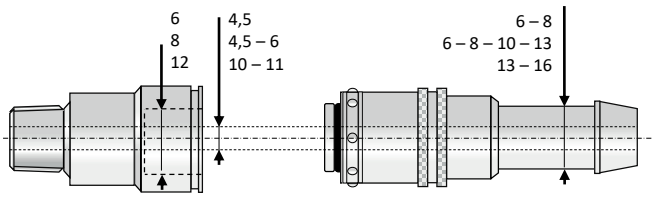

CARATTERISTICHE COSTRUTTIVE – CONSTRUCTION FEATURES

Corpo – Socket Body	Ottone nichelato – Brass
Ghiera – Sleeve	Acciaio Inox – Stainless Steel
Valvola – Valve	Ottone-Brass
Molle – Springs	Acciaio Inox – Stainless Steel
Sfere – Balls	Acciaio Inox – Stainless Steel
Nipplo – Nipple	Ottone – Brass
O-rings	NBR

OPTIONALS

O-Rings FKM +160°C V

PC1511-09-06-10-NR

Anello di colore rosso (R), blu (B) o senza anello – standard – (N)
Coloured ring red (R), blue (B) or without ring – standard – (N)

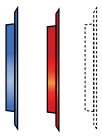

R
B
N

PC1501 INNESTO RAPIDO CON PORTA-GOMMA EASY-LOCK
EASY-LOCK HOSE STEM SOCKET

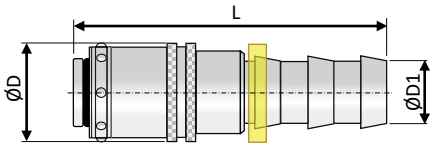

Codice-Code	MISURA SIZE	ØD	ØD1	L
Senza valvola - without valve				
PC1501-08-10-N	8	20	9,5 - 3/8"	66
PC1501-08-13-N	8	20	12,7 -	66
PC1501-12-13-N	12	28	12,7 -	71
PC1501-12-16-N	12	28	16 - 5/8"	82

PC1505 INNESTO RAPIDO CON PORTA-GOMMA EASY-LOCK 45°
45° EASY-LOCK HOSE STEM SOCKET

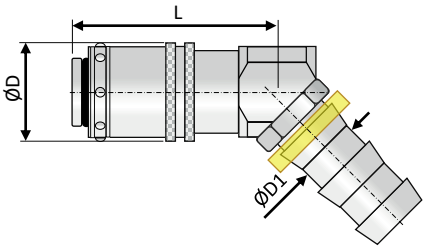

Codice-Code	MISURA SIZE	ØD	ØD1	L
Senza valvola - without valve				
PC1505-08-10-N	8	20	9,5 - 3/8"	45,5
PC1505-08-13-N	8	20	12,7 -	45,5
PC1505-12-13-N	12	28	12,7 -	54
PC1505-12-16-N	12	28	16 - 5/8"	54

PC1509 INNESTO RAPIDO CON PORTA-GOMMA EASY-LOCK 90°
90° EASY-LOCK HOSE STEM SOCKET

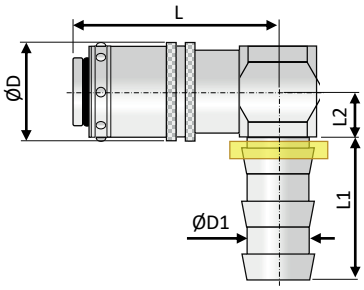

Codice-Code	MISURA SIZE	ØD	ØD1	L
Senza valvola - without valve				
PC1509-08-10-N	8	20	9,5 - 3/8"	45,5
PC1509-08-13-N	8	20	12,7 -	45,5
PC1509-12-13-N	12	28	12,7 -	54
PC1509-12-16-N	12	28	16 - 5/8"	54

PC1503 INNESTO RAPIDO CON PORTA-GOMMA STANDARD
STANDARD HOSE STEM SOCKET

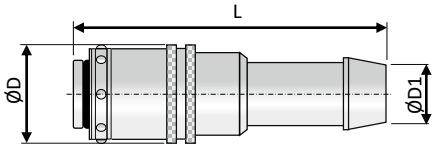

Codice-Code	MISURA SIZE	ØD	ØD1	L
Senza valvola - without valve				
PC1503-06-06-N	6	17	6 - 1/4"	55
PC1503-06-08-N	6	17	8 - 5/16"	55
PC1503-08-06-N	8	20	6 - 1/4"	66
PC1503-08-08-N	8	20	8 - 5/16"	66
PC1503-08-10-N	8	20	10 - 3/8"	66
PC1503-08-12-N	8	20	12 -	66
PC1503-08-13-N	8	20	13 - 1/2"	66
PC1503-12-13-N	12	28	13 - 1/2"	78
PC1503-12-16-N	12	28	16 - 5/8"	78

PC1507 INNESTO RAPIDO CON PORTA-GOMMA STANDARD 45°
45° STANDARD HOSE STEM SOCKET

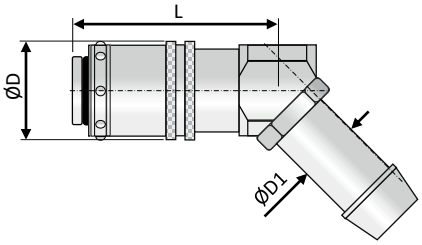

Codice-Code	MISURA SIZE	ØD	ØD1	L
Senza valvola - without valve				
PC1507-08-06-N	8	20	6 - 1/4"	47,5
PC1507-08-08-N	8	20	8 - 5/16"	47,5
PC1507-08-10-N	8	20	10 - 3/8"	47,5
PC1507-08-12-N	8	20	12 -	47,5
PC1507-08-13-N	8	20	13 - 1/2"	47,5
PC1507-12-13-N	12	28	13 - 1/2"	54
PC1507-12-16-N	12	28	16 - 5/8"	54

PC1511 INNESTO RAPIDO CON PORTA-GOMMA STANDARD 90°
WITH 90° STANDARD HOSE STEM SOCKET

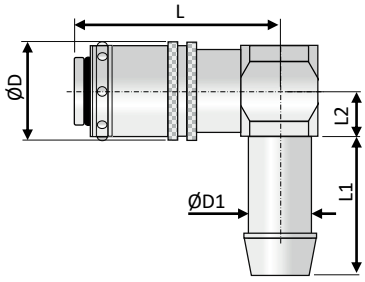

Codice-Code	MISURA SIZE	ØD	ØD1	L
Senza valvola - without valve				
PC1511-08-06-N	8	20	6 - 1/4"	45,5
PC1511-08-08-N	8	20	8 - 5/16"	45,5
PC1511-08-10-N	8	20	10 - 3/8"	45,5
PC1511-08-12-N	8	20	12 -	45,5
PC1511-08-13-N	8	20	13 - 1/2"	45,5
PC1511-12-13-N	12	28	13 - 1/2"	54
PC1511-12-16-N	12	28	16 - 5/8"	54

PC1519 INNESTO RAPIDO CON FILETTO FEMMINA BSPP IN LINEA
BSPP FEMALE THREAD SOCKET

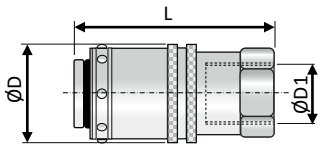

Codice-Code	MISURA SIZE	ØD	ØD1	F	L	L1
Senza valvola - without valve						
PC1519-08-G014-N	8	20	G 1/4"	-	48,5	-
PC1519-08-G038-N	8	20	G 3/8"	-	48,5	-
PC1519-12-G012-N	12	28	G 1/2"	-	71	-
PC1519-12-G034-N	12	28	G 3/4"	-	82	-

PC1521 INNESTO RAPIDO CON FILETTO FEMMINA BSPP 45°
45° BSPP FEMALE THREAD SOCKET

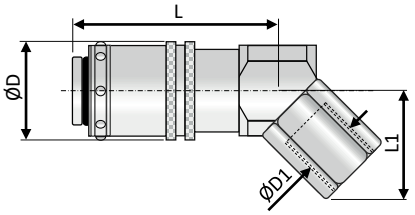

Codice-Code	MISURA SIZE	ØD	ØD1	F	L	L1
Senza valvola - without valve						
PC1521-08-G014-N	8	20	G 1/4"	-	43	14
PC1521-08-G038-N	8	20	G 3/8"	-	72	14,5
PC1521-12-G012-N	12	28	G 1/2"	-	72	17
PC1521-12-G034-N	12	28	G 3/4"	-	72	17

PC1523 INNESTO RAPIDO CON FILETTO FEMMINA BSPP 90°
90° BSPP FEMALE THREAD SOCKET

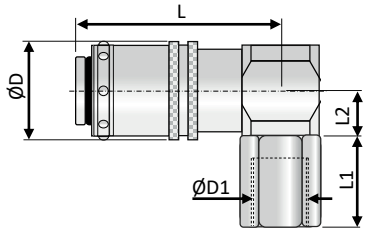

Codice-Code	MISURA SIZE	ØD	ØD1	F	L	L1
Senza valvola - without valve						
PC1523-08-G014-N	8	20	G 1/4"	-	48,5	14
PC1523-08-G038-N	8	20	G 3/8"	-	75	14,5
PC1523-12-G012-N	12	28	G 1/2"	-	75,5	20
PC1523-12-G034-N	12	28	G 3/4"	-	75,5	20

PC1531 INNESTO RAPIDO PER PONTE
BRIDGE SOCKET

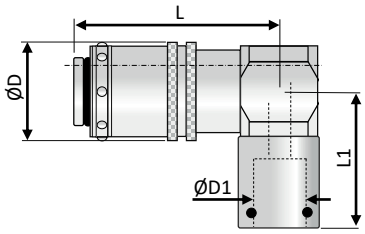

Codice-Code	MISURA SIZE	ØD	ØD1	F	L	L1
Senza valvola - without valve						
PC1531-08-11-N	8	20	10	8	-	54
PC1531-12-14-N	12	28	14	12	-	73
PC1590-11-100-BX	8	10	8	-	100	-
PC1590-11-250-BX	8	10	8	-	250	-
PC1590-11-500-BX	8	10	8	-	500	-

PC1590 TUBO LISCIO PER PONTE
STRAIGHT TUBE FOR BRIDGE

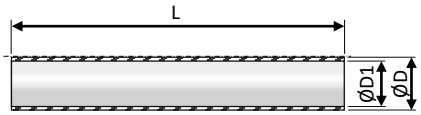

PC1597 ANELLO COLORATO PER INNESTO RAPIDO
COLOURED RING FOR SOCKET

Codice-Code	MISURA SIZE	Colore - Colour
PC1597-06-R	6	rosso - red
PC1597-06-B	6	blu - blue
PC1597-08-R	8	rosso - red
PC1597-08-B	8	blu - blue
PC1597-12-R	12	rosso - red
PC1597-12-B	12	blu - blue

PC1598 ANELLO COLORATO PER NIPPLO
COLOURED RING FOR PLUG

Codice-Code	MISURA SIZE	Colore - Colour
PC1598-06-R	6	rosso - red
PC1598-06-B	6	blu - blue
PC1598-08-R	8	rosso - red
PC1598-08-B	8	blu - blue
PC1598-12-R	12	rosso - red
PC1598-12-B	12	blu - blue

PC1522 NIPPLO CON FILETTO MASCHIO BSPT
BSPT MALE THREAD PLUG

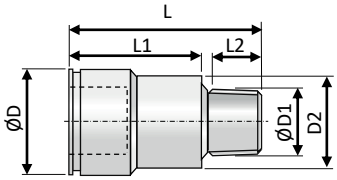

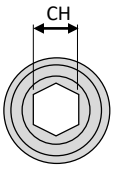

Codice-Code	MISURA SIZE	CH	ØD	ØD1	D2	L	L1	L2
Senza valvola - without valve								
PC1522-06-M010-N	6	6	17	M10x1,5	18	28,5	18,5	10
PC1522-06-R018-N	6	6	17	R 1/8"	18	28,5	18,5	10
PC1522-06-R014-N	6	6	17	R 1/4"	18	30,5	18,5	12
PC1522-08-M010-N	8	6	21	M10x1,5	18	31	21	10
PC1522-08-M101-N	8	6	21	M10x1	18	31	21	10
PC1522-08-M014-N	8	8	21	M14x1,5	18	31	21	11
PC1522-08-R018-N	8	6	21	R 1/8"	18	31	21	7
PC1522-08-R014-N	8	8	21	R 1/4"	18	33	21	11
PC1522-08-R038-N	8	8	21	R 3/8"	18	24	21	11
PC1522-12-R038-N	12	8	32	R 3/8"	25	41	28	11
PC1522-12-R012-N	12	8	32	R 1/2"	25	44	28	16
PC1522-12-R034-N	12	8	32	R 3/4"	25	32	28	14
Con valvola - with valve								
PC1522-08-R018-BYN-N	8	6	21	R 1/8"	18	31	21	11
PC1522-08-R014-BYN-N	8	8	21	R 1/4"	18	33	21	11
PC1522-08-R038-BYN N	8	8	21	R 3/8"	18	24	21	11

PC1548 NIPPLO FILETTO MASCHIO BSPT 45°
45° BSPT MALE THREAD PLUG

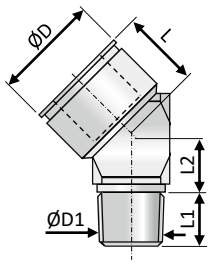

Codice-Code	MISURA SIZE	CH	ØD	ØD1	D2	L	L1	L2
PC1548-08-R018-N	8	-	21	R 1/8"	18	33	24	10
PC1548-08-R014-N	8	-	21	R 1/4"	18	33	24	12
PC1548-08-R038-N	8	-	21	R 3/8"	18	33	24	13

PC1526 NIPPLO FILETTO MASCHIO BSPT 90°
90° BSPT MALE THREAD PLUG

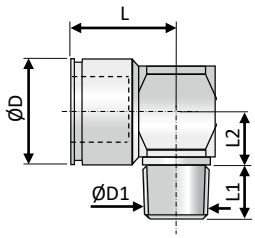

Codice-Code	MISURA SIZE	CH	ØD	ØD1	D2	L	L1	L2
PC1526-08-G018-N	8	-	21	G 1/8"	18	33	24	10
PC1526-08-G014-N	8	-	21	G 1/4"	18	33	24	12
PC1526-08-G038-N	8	-	21	G 3/8"	18	33	24	13

PC1530 NIPPLO CON FILETTO FEMMINA BSPP
BSPP FEMALE THREAD PLUG

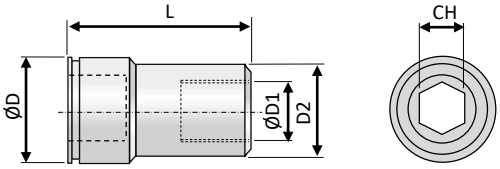

Codice-Code	MISURA SIZE	CH	ØD	ØD1	D2	L
PC1530-08-G018-N	8	6	21	G 1/8"	18	39
PC1530-08-G014-N	8	8	21	G 1/4"	18	39
PC1530-12-G038-N	12	12	32	G 3/8"	25	49
PC1530-12-G012-N	12	12	32	G 1/2"	25	50

PC1534 NIPPLO PROLUNGATO LISCIO
EXTENDED STRAIGHT TUBE PLUG

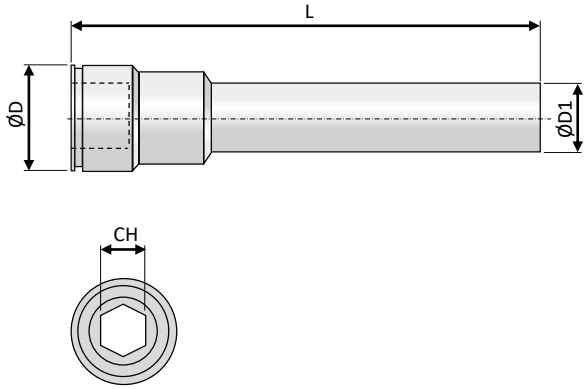

Codice-Code	MISURA SIZE	CH	ØD	ØD1	D2	L
PC1534-08-10-050-N	8	6	21	10,2	18	50
PC1534-08-10-100-N	8	6	21	10,2	18	100
PC1534-08-10-150-N	8	6	21	10,2	18	150
PC1534-08-10-200-N	8	6	21	10,2	18	200
PC1534-08-10-250-N	8	6	21	10,2	18	250
PC1534-08-13-100-N	8	8	32	13,5	18	100
PC1534-08-13-150-N	8	8	32	13,5	18	150
PC1534-08-13-200-N	8	8	32	13,5	18	200
PC1534-08-13-250-N	8	8	32	13,5	18	250

PC1538 NIPPLO PROLUNGATO ESTREMITA' FILETTO MASCHIO BSPT
EXTENDED STRAIGHT TUBE AND BSPT MALE THREAD PLUG

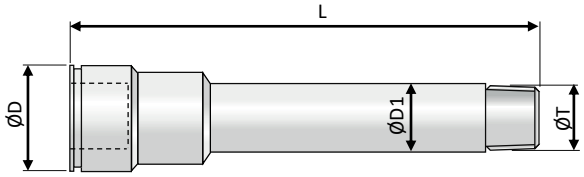

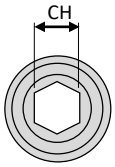

Codice-Code	MISURA SIZE	CH	ØD	ØD1	L	L1	ØT
PC1538-08-R018-L100-N	8	6	21	10,2	100	-	R 1/8"
PC1538-08-R018-L150-N	8	6	21	10,2	150	-	R 1/8"
PC1538-08-R018-L200-N	8	6	21	10,2	200	-	R 1/8"
PC1538-08-R018-L250-N	8	6	21	10,2	250	-	R 1/8"
PC1538-08-R014-L100-N	8	6	21	10,2	100	-	R 1/4"
PC1538-08-R014-L150-N	8	6	21	10,2	150	-	R 1/4"
PC1538-08-R014-L200-N	8	6	21	10,2	200	-	R 1/4"
PC1538-08-R014-L250-N	8	6	21	10,2	250	-	R 1/4"
PC1538-12-R038-L100-N	8	8	32	13,5	100	-	R 3/8"
PC1538-12-R038-L150-N	8	8	32	13,5	150	-	R 3/8"
PC1538-12-R038-L200-N	8	8	32	13,5	200	-	R 3/8"
PC1538-12-R038-L250-N	8	8	32	13,5	250	-	R 3/8"
PC1538-12-R012-L100-N	8	8	32	13,5	100	-	R 1/2"
PC1538-12-R012-L150-N	8	8	32	13,5	150	-	R 1/2"
PC1538-12-R012-L200-N	8	8	32	13,5	200	-	R 1/2"
PC1538-12-R012-L250-N	8	8	32	13,5	250	-	R 1/2"

PC1540 NIPPLO PROLUNGATO ESTREMITA' FILETTO MASCHIO BSPP LUNGO
EXTENDED STRAIGHT TUBE AND LONG BSPP MALE THREAD PLUG

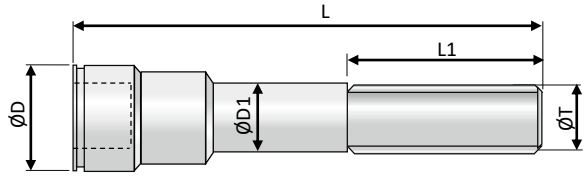

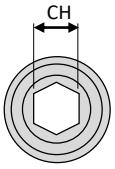

Codice-Code	MISURA SIZE	CH	ØD	ØD1	L	L1	ØT
PC1540-08-G018-L050-N	8	6	21	10,2	50	26	G 1/8"
PC1540-08-G018-L100-N	8	6	21	10,2	100	60	G 1/8"
PC1540-08-G018-L150-N	8	6	21	10,2	150	60	G 1/8"
PC1540-08-G014-L050-N	8	8	21	10,2	50	27	G 1/4"
PC1540-08-G014-L100-N	8	8	21	10,2	100	60	G 1/4"
PC1540-08-G014-L150-N	8	8	21	10,2	150	60	G 1/4"
PC1540-08-G014-L200-N	8	8	21	10,2	200	60	G 1/4"

PC1600

Innesti rapidi standard Italiano, intercambiabili con altri marchi con la stessa denominazione o profilo.
Italian Standard Quick couplings, Fully interchangeable with other brands with the same plug profile.

CARATTERISTICHE DI FUNZIONAMENTO – TECHNICAL FEATURES

Range di temperatura di esercizio:	acqua non pressurizzata\olio -5\+180°C
Pressione max. di esercizio:	15 Bar
Working temperature range:	water\oil -5°\+180°C with FKM seals (standard)
Max. working pressure:	15 Bar

Diametri e passaggio flusso:
Size and flow size:

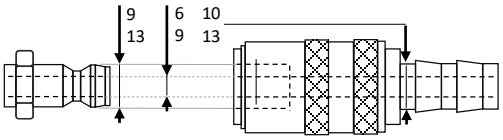

CARATTERISTICHE COSTRUTTIVE – CONSTRUCTION FEATURES

Corpo – Socket Body	Ottone – Brass
Ghiera – Sleeve	Ottone – Brass (nichelato per versione senza valvola /Nickel plated for version without shut-off)
Valvola – Valve	Ottone – Brass
Molle – Springs	Acciaio Inox – Stainless Steel
Sfere – Balls	Acciaio Inox – Stainless Steel
Nipplo – Nipple	Ottone – Brass
O-Rings	FKM

OPTIONALS

Con valvola di ritegno – With shut-off Valve	Y
Senza valvola – Without valve	N

PC1611-09-10-BYNV

PC1601 INNESTO RAPIDO CON PORTA-GOMMA EASY-LOCK
EASY-LOCK HOSE STEM SOCKET

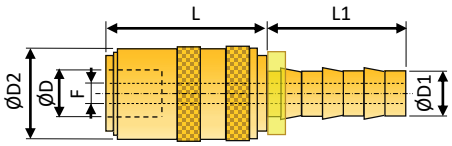

Codice-Code	misura size	CH	F	D1	D2	L	L1
Senza valvola - without valve							
PC1101-06-10-BXNV	6	-	6	10	18	30	24
PC1601-09-13-BXLV	9	-	9	13	25	36.4	28
Con valvola - with valve							
PC1101-06-10-BYNV	6	-	6	10	18	30	24
PC1601-09-13-BYLV	9	-	9	13	25	36.4	28

Per la misura da 6 si utilizza il modello PC1101 – For size 6 use PC1101

PC1603 INNESTO RAPIDO CON PORTA-GOMMA STANDARD
STANDARD HOSE SOCKET

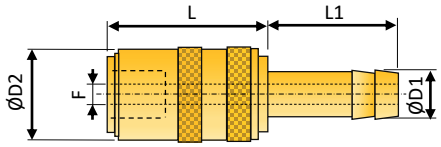

Codice-Code	misura size	CH	F	D1	D2	L	L1
Senza valvola - without valve							
PC1603-06-10-BXNV	6	-	6	10	18	30	18
PC1603-09-13-BXNV	9	-	9	13	25	36.4	24.8
Con valvola - with valve							
PC1603-06-09-BYNV	6	-	6	10	18	30	18
PC1603-09-13-BYNV	9	-	9	13	25	36.4	24.8

Per la misura da 6 si utilizza il modello PC1103 – For size 6 use PC1103

PC1611 INNESTO RAPIDO CON PORTA-GOMMA STANDARD 90°
WITH 90° STANDARD HOSE STEM SOCKET

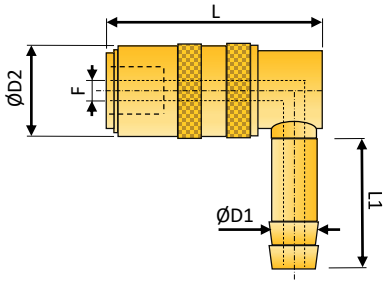

Codice-Code	misura size	CH	F	D1	D2	L	L1
Senza valvola - without valve							
PC1611-06-09-BXNV	6	-	6	10	18	42	26
PC1611-09-13-BXNV	9	-	9	13	25	52	24
Con valvola - with valve							
PC1611-06-09-BYNV	6	-	6	10	18	42	26
PC1611-09-13-BYNV	9	-	9	13	25	52	24

Per la misura da 6 si utilizza il modello PC1111 – For size 6 use PC1111

PC1622 NIPPLO FILETTO MASCHIO BSPT
BSPT MALE THREAD PLUG

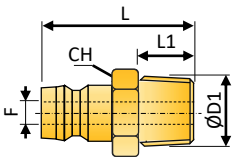

Codice-Code	misura size	CH	F	D1	D2	L	L1
Senza valvola - without valve							
PC1622-06-R018-B	6	11	6	R 1/8"	-	28	-
PC1622-06-M010-B	6	11	6	M10	-	28	-
PC1622-06-R014-B	6	14	6	R 1/4"	-	28	-
PC1622-09-R014-B	9	14	9	R 1/4"	-	29	-
PC1622-09-R038-B	9	17	9	R 3/8"	-	29	-
PC1622-09-R012-B	9	22	9	R 1/2"	-	29	-

PC1634 NIPPLO PROLUNGATO LISCIO
EXTENDED STRAIGHT TUBE PLUG

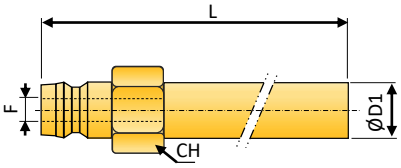

Codice-Code	misura size	CH	F	D1	D2	L	L1
Senza valvola - without valve							
PC1634-06-B-120	6	14	6	10	-	120	-
PC1634-06-B-240	6	14	6	10	-	240	-
PC1634-06-B-360	6	14	6	10	-	360	-
PC1634-09-B-150	9	17	9	14	-	150	-
PC1634-09-B-300	9	17	9	14	-	300	-

PC1700

Innesti rapidi standard Italiano, intercambiabili con altri marchi con la stessa denominazione o profilo.
Italian Standard Quick couplings, Fully interchangeable with other brands with the same plug profile.

CARATTERISTICHE DI FUNZIONAMENTO – TECHNICAL FEATURES

Range di temperatura di esercizio:	acqua non pressurizzata\olio diatermico -20\+120°C
Pressione max. di esercizio:	18 Bar
Working temperature range:	water\diathermic oil -20°\+120°C with FKM seals (standard)
Max. working pressure:	18 Bar

Diametri e passaggio flusso:
Size and flow size:

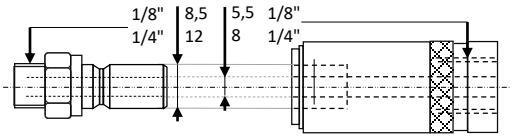

CARATTERISTICHE COSTRUTTIVE – CONSTRUCTION FEATURES

Corpo – Socket Body	Ottone nichelato – Nickel plated brass
Ghiera – Sleeve	Ottone nichelato – Nickel plated brass
Valvola – Valve	Ottone nichelato – Nickel plated brass
Molle – Springs	Acciaio Inox Aisi 302– Stainless Steel
Sfere – Balls	Acciaio Inox – Stainless Steel
Nipplo – Nipple	Ottone – Brass
O-Rings	FKM

OPTIONALS

Con valvola di ritegno – With shut-off Valve	Y
Senza valvola – Without valve	X

PC1719-12-G014-BYNV

PC1719 INNESTO RAPIDO CON FILETTO FEMMINA BSPP
BSPP FEMALE THREAD SOCKET

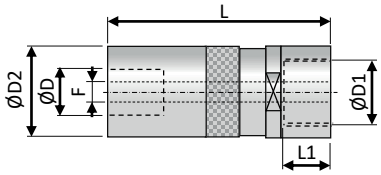

Codice-Code	CH	F	D1	D2	L	L1	L2
Senza valvola - without valve							
PC1719-05-G018-BXNV	16	5	G1/8"	19	45	7	-
PC1719-08-G014-BXNV	21	8	G1/4"	25	56	8	-
Con valvola - with valve							
PC1719-05-G018-BYNV	16	5	G1/8"	19	45	7	-
PC1719-08-G014-BYNV	21	8	G1/4"	25	56	8	-

PC1718 NIPPLO FILETTO MASCHIO BSPP CON O-RING
BSPP MALE THREAD PLUG WITH O-RING

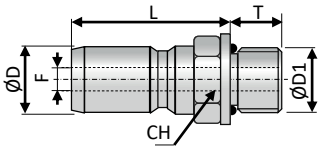

Codice-Code	CH	F	D1	D2	L	L1	L2
Senza valvola - without valve							
PC1718-05-G018	13	5	G1/8"	15	28,5	6	-
PC1718-08-G014	14	8	G1/4"	18	37	8	-

PC1730 NIPPLO FILETTO FEMMINA BSPP
BSPP FEMALE THREAD PLUG

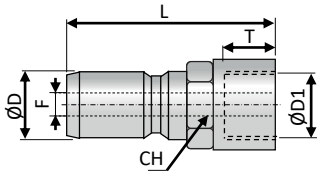

Codice-Code	CH	F	D1	D2	L	L1	L2
Senza valvola - without valve							
PC1730-05-G018	-	5	G1/8"	14	28	7	-
PC1730-08-G014	-	8	G1/4"	17	37,5	8	-

PC1738 PROLUNGA FILETTO MESCHIO-FEMMINA BSPP
BSPP MALE-FEMALE EXTENSION PLUG

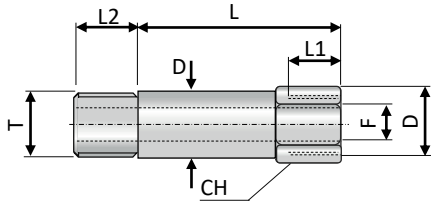

Codice-Code	CH	F	D1	D2	L	L1	L2
PC1738-05-G018-L022	14	5	G 1/8"	-	22	8	6
PC1738-05-G018-L042	14	5	G 1/8"	-	42	8	6
PC1738-05-G018-L051	14	5	G 1/8"	-	51	8	6
PC1738-08-G014-L035	17	8	G 1/4"	-	35	11	8
PC1738-08-G014-L051	17	8	G 1/4"	-	51	11	8

PC1800

Innesti rapidi per portate elevate intercambiabili con altri marchi con la stessa denominazione o profilo.
High flow Quick couplings series. Fully interchangeable with other brands with the same plug profile.

CARATTERISTICHE DI FUNZIONAMENTO – TECHNICAL FEATURES

Range di temperatura di esercizio:	-20\+100°C con guarnizioni standard NBR
Pressione max. di esercizio:	15 Bar
Working temperature range:	-20°\+100°C with NBR standard seals
Max. working pressure:	15 Bar

CARATTERISTICHE COSTRUTTIVE – CONSTRUCTION FEATURES

Corpo – Socket Body	Ottone nichelato – Nickel plated brass
Ghiera – Sleeve	Ottone nichelato – Nickel plated brass
Molle – Springs	Acciaio Inox Aisi 302– Stainless Steel
Sfere – Balls	Acciaio Inox – Stainless Steel
Nipplo – Nipple	Ottone – Brass
O-Rings	NBR (FKM optional)

PC1819 INNESTO RAPIDO CON FILETTO FEMMINA BSPP
BSPP FEMALE THREAD SOCKET

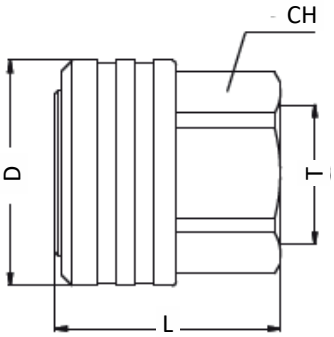

Codice-Code	CH	ØD	L	ØT
Senza valvola - without valve				
PC1819-25-G100-B	41	57	57	G1"
PC1819-33-G114-B	50	65	62	G1"1/4
PC1819-42-G112-B	60	78	66	G1"1/2
PC1819-50-G200-B	70	89	70	G2"

Promec FITTINGS

PC1830 NIPPLO RAPIDO CON FILETTO FEMMINA BSPP
BSPP FEMALE THREAD PLUG

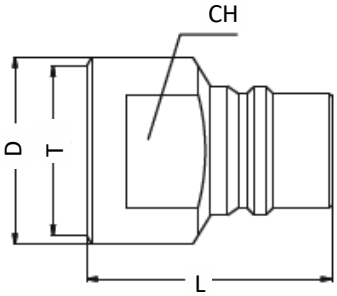

Codice-Code	CH	ØD	L	L1	ØT
Senza valvola - without valve					
PC1830-25-G100-B	41	45	61	-	G1"
PC1830-33-G114-B	50	55	66	-	G1"1/4
PC1830-50-G200-B	71	75	78	-	G2"

PC2226 RACCORDO PORTAGOMMA OTTONE NICHELATO FILETTO MASCHIO BSPP
NIKEL PLATED BRASS HOSE TAIL WITH BSPP MALE THREAD

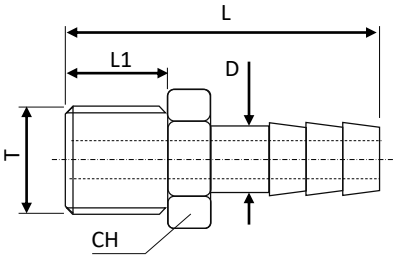

Codice-Code	CH	ØD	L	L1	ØT
PC2226-25-G100	40	30	70	19	G1"
PC2226-33-G114	50	40	69	21	G1"1/4
PC2226-50-G200	70	50	85	25	G2"

PC2205 NIPPLO IN OTTONE NICHELATO MASCHIO\MASCHIO BSPP
NIKEL PLATED BRASS MALE\MALE FITTING BSPP

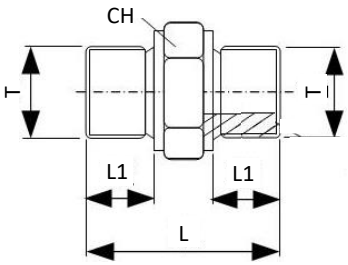

Codice-Code	CH	ØD	L	L1	ØT
PC2205-G100	50	-	52	19	G1"
PC2205-G114	52	-	52	21	G1"1/4
PC2205-G200	65	-	65	25	G2"

PC1819-P TAPPO DI PROTEZIONE PER INNESTO FEMMINA
PROTECTION PLUG FOR SOCKET

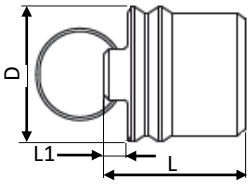

Codice-Code	CH	ØD	L	L1	ØT
PC1819-25-P	-	34	41	10	-
PC1819-33-P	-	42	46	10	-
PC1819-50-P	-	60	55	10	-

PC2900

Innesti rapidi Camlock DIN EN 14 420-7 per portate elevate intercambiabili con altri marchi con la stessa denominazione o profilo. Costruzione in Aisi 1.4401.
Camlock quick couplings DIN EN 14 420-7 (MIL-C.-27487) for high flow connections. Fully interchangeable with other brands with the same plug profile.
Aisi 1.4401 construction.

CARATTERISTICHE DI FUNZIONAMENTO – TECHNICAL FEATURES

Range di temperatura di esercizio:	-40\+95°C con guarnizioni standard NBR
Pressione max. di esercizio:	16 Bar
Working temperature range:	-40°\+95°C with NBR standard seals
Max. working pressure:	16 Bar

© LÜDECKE

PC2901 INNESTO CON PORTAGOMMA
COUPLING WITH HOSE STEM

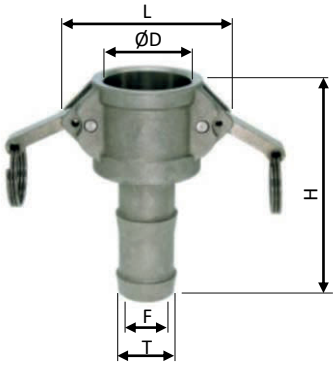

Codice - Code	misura size	ØD	DN	F	H	L	T
PC2901-050-013	50=1/2	24,5	15	8	86	40	13
PC2901-075-019	75=3/4	32,4	20	14	82	63	19
PC2901-100-025	100=1"	37,3	25	20	97	72	25
PC2901-125-032	125=1	46	32	25,5	108	83	32
PC2901-150-038	150=1	54	40	32	112	90	38
PC2901-200-050	200=2"	63,8	50	44	130	102	50
PC2901-250-063	250=2	76,5	65	56,5	136	119	63
PC2901-300-075	300=3"	92,2	80	75	162	135	75
PC2901-400-100	400=4"	120	100	95	163	174	100

PC2903 INNESTO CON FILETTO FEMMINA
BSPP COUPLING WITH BSPP FEMALE THREAD

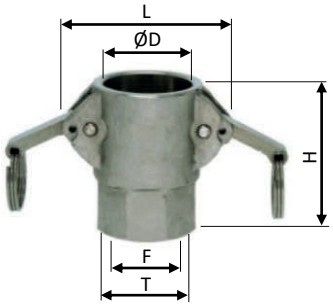

Codice - Code	misura size	ØD	DN	F	H	L	T
PC2903-050-G012	50=1/2	24,5	15	15	45	40	G 1/2"
PC2903-075-G034	75=3/4	32,4	20	20	51	63	G 3/4"
PC2903-100-G100	100=1"	37,3	25	25	62	72	G 1"
PC2903-125-G114	125=1	46	32	32	70	83	G 1"1/4
PC2903-150-G112	150=1	54	40	40	71	90	G 1"1/2
PC2903-200-G200	200=2"	63,8	50	50	78	102	G 2"
PC2903-250-G212	250=2	76,5	65	65	77	119	G 2"1/2
PC2903-300-G300	300=3"	92,2	80	80	91	135	G 3"
PC2903-400-G400	400=4"	120	100	100	85	174	G 4"

PC2905 INNESTO CON FILETTO MASCHIO BSPT
COUPLING WITH BSPT MALE THREAD

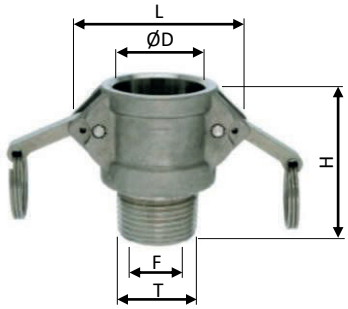

Codice - Code	misura size	ØD	DN	F	H	L	T
PC2905-050-R012	50=1/2	24,5	15	14	47	40	R 1/2"
PC2905-075-R034	75=3/4	32,4	20	19	54	63	R 3/4"
PC2905-100-R100	100=1"	37,3	25	25	64	72	R 1"
PC2905-125-R114	125=1	46	32	32	70	83	R 1"1/4
PC2905-150-R112	150=1	54	40	38	71	90	R 1"1/2
PC2905-200-R200	200=2"	63,8	50	51	77	102	R 2"
PC2905-250-R212	250=2	76,5	65	63	85	119	R 2"1/2
PC2905-300-R300	300=3"	92,2	80	75	95	135	R 3"
PC2905-400-R400	400=4"	120	100	102	90	174	R 4"

PC2907 INNESTO CIECO
BLIND COUPLING

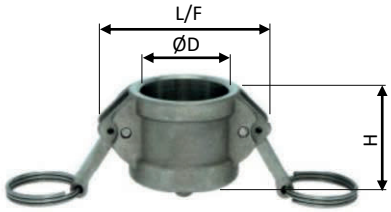

Codice - Code	misura size	ØD	DN	F	H	L	T
PC2907-050	50=1/2	24,5	15	24,5	42	40	-
PC2907-075	75=3/4	32,4	20	32,4	42	63	-
PC2907-100	100=1"	37,3	25	37,3	49	72	-
PC2907-125	125=1	46	32	46	57	83	-
PC2907-150	150=1	54	40	54	59	90	-
PC2907-200	200=2"	63,8	50	63,8	63	102	-
PC2907-250	250=2	76,5	65	76,5	67	119	-
PC2907-300	300=3"	92,2	80	92,2	70	135	-
PC2907-400	400=4"	120	100	120	70	174	-

PC2902 NIPPLO CON PORTAGOMMA
PLUG WITH HOSE STEM

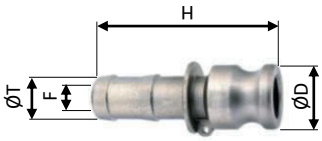

Codice - Code	misura size	ØD	DN	F	H	T
PC2902-050-013	50=1/2	24	15	8	87	13
PC2902-075-019	75=3/4	32,1	20	14	88	19
PC2902-100-025	100=1"	36,7	25	20	103	25
PC2902-125-032	125=1	45,5	32	25	110	32
PC2902-150-038	150=1	53,4	40	32	116	38
PC2902-200-050	200=2"	63	50	43	146	50
PC2902-250-063	250=2	75,8	65	56	148	63
PC2902-300-075	300=3"	91,5	80	67	167	75
PC2902-400-100	400=4"	120	100	93	175	100

PC2904 NIPPLO CON FILETTO MASCHIO BSPT
PLUG WITH BSPT MALE THREAD

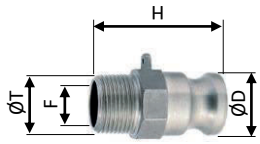

Codice - Code	misura size	ØD	DN	F	H	T
PC2904-050-R012	50=1/2	24	15	14	49	R 1/2"
PC2904-075-R034	75=3/4	32,1	20	22	64	R 3/4"
PC2904-100-R100	100=1"	36,7	25	24	72	R 1"
PC2904-125-R114	125=1	45,5	32	29	81	R 1"1/4
PC2904-150-R112	150=1	53,4	40	38	82	R 1"1/2
PC2904-200-R200	200=2"	63	50	51	90	R 2"
PC2904-250-R212	250=2	75,8	65	58	105	R 2"1/2
PC2904-300-R300	300=3"	91,5	80	74	104	R 3"
PC2904-400-R400	400=4"	120	100	97	114	R 4"

PC2906 NIPPLO CON FILETTO FEMMINA BSPP
PLUG WITH BSPP FEMALE THREAD

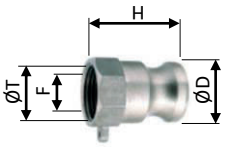

Codice - Code	misura size	ØD	DN	F	H	T
PC2906-050-G012	50=1/2	24	15	14	41	G 1/2"
PC2906-075-G034	75=3/4	32,1	20	22	42	G 3/4"
PC2906-100-G100	100=1"	36,7	25	24	52	G 1"
PC2906-125-G114	125=1	45,5	32	29	58	G 1"1/4
PC2906-150-G112	150=1	53,4	40	38	62	G 1"1/2
PC2906-200-G200	200=2"	63	50	51	71	G 2"
PC2906-250-G212	250=2	75,8	65	58	75	G 2"1/2
PC2906-300-G300	300=3"	91,5	80	74	79	G 3"
PC2906-400-G400	400=4"	120	100	97	81	G 4"

PC2908 NIPPLO CIECO
BLIND PLUG

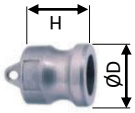

Codice - Code	misura size	ØD	DN	F	H	T
PC2908-050	50=1/2	24	15	-	36	-
PC2908-075	75=3/4	32,1	20	-	39	-
PC2908-100	100=1"	36,7	25	-	46	-
PC2908-125	125=1	45,5	32	-	55	-
PC2908-150	150=1	53,4	40	-	57	-
PC2908-200	200=2"	63	50	-	60	-
PC2908-250	250=2	75,8	65	-	66	-
PC2908-300	300=3"	91,5	80	-	66	-
PC2908-400	400=4"	120	100	-	68	-

PH1230 INNESTO RAPIDO FEMMINA ISO 16028
ISO 16028 FEMALE QUICK COUPLING

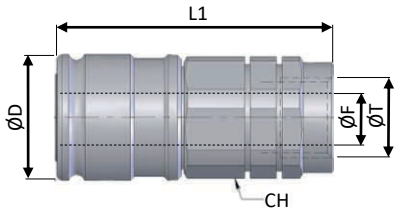

Codice-Code	misura size	CH	D	F	L	L1	ØT	max Bar
PH1230-04-G014	6,3 - 1/4"	24	28	6,3	108	63	G1/4"	400
PH1230-06-G038	10 - 3/8"	30	32	10	122	69	G3/8"	350
PH1230-06-G012	10 - 3/8"	30	32	10	122	69	G1/2"	350
PH1230-08-G012	12,5 - 1/2"	36	38	12,5	136	82	G1/2"	350
PH1230-08-G034	12,5 - 1/2"	36	38	12,5	136	82	G3/4"	350
PH1230-12-G034	16 - 5/8"	38	42	16	142	90	G3/4"	330
PH1230-16-G034	19 - 3/4"	46	48	19	158	98	G3/4"	330
PH1230-16-G100	19 - 3/4"	46	48	19	158	98	G1"	330
PH1230-20-G114	25 - 1"	55	55	25	180	144	G1"1/4	300

DISPONIBILI CON O-RINGS FKM – AVAILABLE WITH FKM O-RINGS

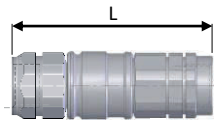

PH1231 INNESTO RAPIDO MASCHIO ISO 16028
ISO 16028 MALE QUICK COUPLING

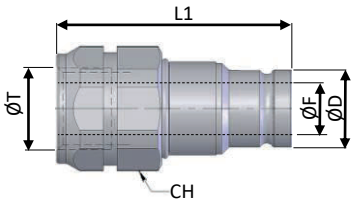

Codice-Code	misura size	CH	D	F	L	L1	ØT	max Bar
PH1231-04-G014	6,3 - 1/4"	22	16,1	6,3	108	57	G1/4"	400
PH1231-06-G038	10 - 3/8"	24	19,7	10	122	68	G3/8"	350
PH1231-06-G012	10 - 3/8"	27	19,7	10	122	68	G1/2"	350
PH1231-08-G012	12,5 - 1/2"	32	24,5	12,5	136	70	G1/2"	350
PH1231-08-G034	12,5 - 1/2"	36	24,5	12,5	136	70	G3/4"	350
PH1231-12-G034	16 - 5/8"	36	27	16	142	70	G3/4"	330
PH1231-16-G034	19 - 3/4"	41	30	19	158	83	G3/4"	330
PH1231-16-G100	19 - 3/4"	36	30	19	158	83	G1"	330
PH1231-20-G114	25 - 1"	55	36	25	180	90	G1"1/4	300

DISPONIBILI CON O-RINGS FKM – AVAILABLE WITH FKM O-RINGS

PH1210 INNESTO RAPIDO FEMMINA ISO 7241-A
ISO 7241-A FEMALE QUICK COUPLING

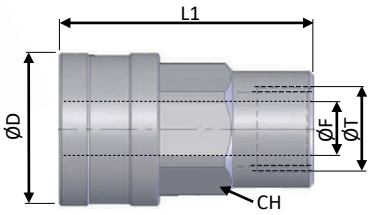

Codice-Code	misura size	CH	D	F	L	L1	ØT	max Bar
PH1210-04-G014	6,3 - 1/4"	19	25	6	68	47	G1/4"	350
PH1210-06-G038	10 - 3/8"	24	31	10	80	58	G3/8"	315
PH1210-08-G012	12,5 - 1/2"	30	38	12	91	67	G1/2"	250
PH1210-12-G034	20 - 3/4"	38	46	20	109	81	G3/4"	250
PH1210-16-G100	25 - 1"	45	55	25	124	96	G1"	230
PH1210-20-G114	32 - 1.1/4"	50	65	32	151	117	G1 1/4"	230
PH1210-24-G112	38 - 1.1/2"	60	80	38	171	123	G1 1/2"	190
PH1210-32-G200	50 - 2"	75	100	50	201	160	G2"	130

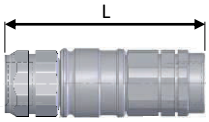

PH1211 INNESTO RAPIDO MASCHIO ISO 7241-A
ISO 7241-A MALE QUICK COUPLING

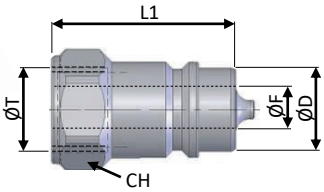

Codice-Code	misura size	CH	D	F	L	L1	ØT	max Bar
PH1211-04-G014	6,3 - 1/4"	19	-	6	68	34,5	G1/4"	350
PH1211-06-G038	10 - 3/8"	22	-	10	80	39	G3/8"	315
PH1211-08-G012	12,5 - 1/2"	27	-	12	91	45	G1/2"	250
PH1211-12-G034	20 - 3/4"	34	-	20	109	54,5	G3/4"	250
PH1211-16-G100	25 - 1"	41	-	25	124	62	G1"	230
PH1211-20-G114	32 - 1.1/4"	55	-	32	151	75	G1 1/4"	230
PH1211-24-G112	38 - 1.1/2"	60	-	38	171	85	G1 1/2"	190
PH1211-32-G200	50 - 2"	75	-	50	201	100	G2"	130

PH1220

INNESTO RAPIDO FEMMINA ISO 7241-B
ISO 7241-B FEMALE QUICK COUPLING

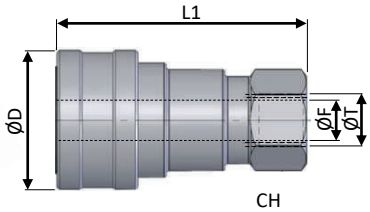

Codice-Code	misura size	CH	D	F	L	L1	ØT	max Bar
PH1220-04-G014	6,3 - 1/4"	19	27	6	71	57	G1/4"	350
PH1220-06-G038	10 - 3/8"	24	34	10	83	66	G3/8"	350
PH1220-08-G012	12,5 - 1/2"	27	42	12	93	74	G1/2"	300
PH1220-12-G034	20 - 3/4"	36	50	20	110	90	G3/4"	280
PH1220-16-G100	25 - 1"	41	60	25	133	106	G1"	230

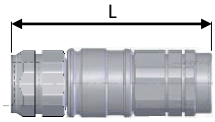

PH1221

INNESTO RAPIDO MASCHIO ISO 7241-B
ISO 7241-B MALE QUICK COUPLING

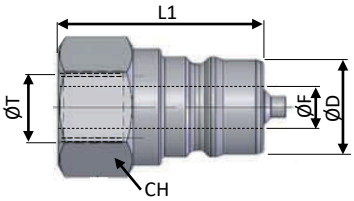

Codice-Code	misura size	CH	D	F	L	L1	ØT	max Bar
PH1221-04-G014	6,3 - 1/4"	19	-	6	71	35	G1/4"	350
PH1221-06-G038	10 - 3/8"	24	-	10	83	42	G3/8"	350
PH1221-08-G012	12,5 - 1/2"	27	-	12	93	46	G1/2"	300
PH1221-12-G034	20 - 3/4"	36	-	20	110	55	G3/4"	280
PH1221-16-G100	25 - 1"	41	-	25	133	66	G1"	230

PH1260

INNESTO RAPIDO FEMMINA ISO 7241-B - OTTONE
ISO 7241-B FEMALE QUICK COUPLING - BRASS

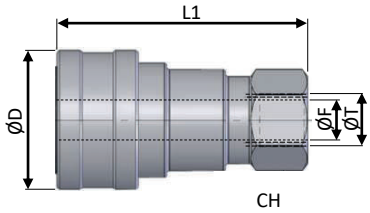

Codice-Code	misura size	CH	D	F	L	L1	ØT	max Bar
PH1260-04-G014	6,3 - 1/4"	19	27	6	71	57	G1/4"	185
PH1260-06-G038	10 - 3/8"	24	34	10	83	66	G3/8"	150
PH1260-08-G012	12,5 - 1/2"	27	42	12	93	74	G1/2"	150
PH1260-12-G034	20 - 3/4"	36	50	20	110	90	G3/4"	140
PH1260-16-G100	25 - 1"	41	60	25	133	106	G1"	105

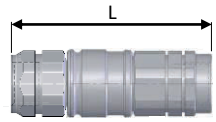

PH1261

INNESTO RAPIDO MASCHIO ISO 7241-B - OTTONE
ISO 7241-B MALE QUICK COUPLING - OTTONE

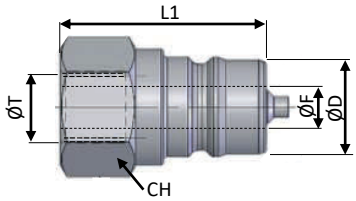

Codice-Code	misura size	CH	D	F	L	L1	ØT	max Bar
PH1261-04-G014	6,3 - 1/4"	19	-	6	71	35	G1/4"	185
PH1261-06-G038	10 - 3/8"	24	-	10	83	42	G3/8"	150
PH1261-08-G012	12,5 - 1/2"	27	-	12	93	46	G1/2"	150
PH1261-12-G034	20 - 3/4"	36	-	20	110	55	G3/4"	140
PH1261-16-G100	25 - 1"	41	-	25	133	66	G1"	105

PH1240

INNESTO RAPIDO OLEODINAMICO FEMMINA ALTA PRESSIONE AISI 303
E GHIERA ALLUMINIO ANODIZZATO
HIGH PRESSURE HYDRAULIC QUICK COUPLING WITH STAINLESS STEEL
CONSTRUCTION AND ALUMINIUM SLEEVE

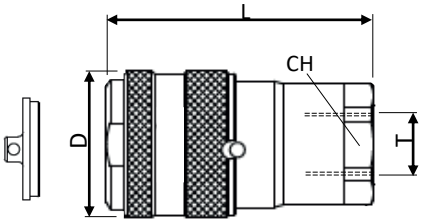

Codice-Code	CH	ØD	F	L	T	max l/min	max Bar connesso connected	max Bar disconnesso disconnected	Cod tappo-plug
PH1240-07-G038-B	25	31,5	8	58	G3/8"	15	500	180	PH1240-07-P
PH1240-07-G038-R	25	31,5	8	58	G3/8"	15	500		PH1240-07-P
PH1240-08-G012-B	30	40	10	72	G1/2"	30	450		PH1240-08-P
PH1240-08-G012-R	30	40	10	72	G1/2"	30	450		PH1240-08-P
PH1240-11-G012-B	30	40	11	72	G1/2"	50	450		PH1240-08-P
PH1240-11-G012-R	30	40	11	72	G1/2"	50	450		PH1240-08-P
PH1240-12-G034-B	41	50	12	89	G3/4"	80	400		PH1240-12-P
PH1240-12-G034-R	41	50	12	89	G3/4"	80	400		PH1240-12-P

PH1241

INNESTO RAPIDO OLEODINAMICO MASCHIO ALTA PRESSIONE AISI 303
HIGH PRESSURE HYDRAULIC QUICK PLUG WITH STAINLESS STEEL CONSTRUCTION

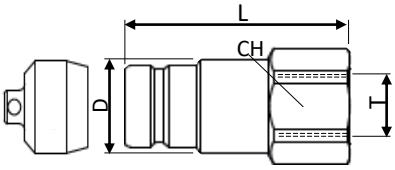

Codice-Code	CH	ØD	F	L	T	max l/min	max Bar connesso connected	max Bar disconnesso disconnected	Cod tappo-plug
PH1241-07-G038	22	21,5	8	49	G3/8"	15	500	180	PH1241-07-P
PH1241-08-G012	30	32,5	10	63	G1/2"	30	450		PH1241-08-P
PH1241-11-G012	30	32,5	11	63	G1/2"	50	450		PH1241-08-P
PH1241-12-G034	41	44,5	12	74	G3/4"	80	400		PH1241-12-P

PA1000

Innesti rapidi in ottone nichelato robusti e compatti, utilizzabili con tubazioni in Poliammide, Polietilene e Poliuretano, PTFE, FEP, per aria compressa, vuoto e liquidi vari compatibili con i materiali costruttivi. Particolarmente adatti al condizionamento degli stampi per la presenza del doppio O-Ring di tenuta, al fine di ridurre al minimo il rischio di eventuali perdite.

Nickel-plated quick coupling high restistance and compact. Adapt for use with Polyamide, Polyurethane, Polyetylene, PTFE and FEP tubes, for compressed air, vacuum and non corrosive liquids. Specially developed for mould conditioning thanks to the double O-Ring as to reduce to the minimum the rist of lackages.

CARATTERISTICHE TECNICHE e DI FUNZIONAMENTO

CORPO: Ottone Nichelato UNI EN 12164 CW614N & UNI EN 12164 CW617N
COLLARE: POM
COLLETTO: Ottone Nichelato UNI EN 12164 CW164N
GUARNIZIONE: NBR. FKM OPZIONALI
PINZA: Acciaio Inox AISI 301
DISTANZIALE: PBT
ANELLO DI TENUTA: Acciaio Inox AISI 316
Pressione max. di esercizio: 60 Bar (Compatibilmente con il tubo utilizzato).
Range temperatura di esercizio: -20 / +80°C (FKM 150°C)
Filetti Gas conici BSPT ISO 7; Gas cilindrici BSPP ISO 228; metrici ISO 262

TECHNICAL AND WORKING FEATURES

BODY: nickel plated brass UNI EN 12164 CW614N & UNI EN 12164 CW617N
COLLAR: POM
COLLET (sleeve): nickel plated brass UNI EN 12164 CW614N
Seals: NBR. FKM OPTION
LOCK CLAW: AISI 301 Stainless steel Back
O-RING: PBT
RETAINING RING for swivel systems: AISI 302 Stainless steel
Max. working pressure: 60 Bar (Eventually limited to the hose pressure)
Working temperature range: -20 / +80°C (150°C with FKM)
Threads: BSPT ISO 7; BSPP ISO 228; Metric ISO 262

INSERIMENTO DEL TUBO AL RACCORDO
Assicurarsi che il tubo sia sempre inserito completamente fino a battuta. Tagliare il tubo a 90°, inserirlo fino a battuta e tirarlo con accuratezza per accertare il corretto inserimento. Se ci sono danni o imperfezioni sulla superficie del tubo o se lo stesso risulta ovalizzato, si possono verificare perdite d'aria o una imprevista disconnessione.
Il diametro esterno del tubo in poliuretano si espande in base alla pressione applicata, in tal caso tagliare l'estremità del tubo precedentemente connesso per poterlo riutilizzare.
DISCONNESSIONE DEL TUBO DAL RACCORDO
Accertarsi che il tubo non sia in pressione prima della disconnessione. Premere l'anello di sgancio, tirare ed estrarre il tubo contemporaneamente.

INSERTION OF THE TUBE INTO THE FITTING - Make sure the tube is fully inserted into the fitting. - To insert the tube into the fitting cut the tube at a squared angle (90°), insert up to the end and pull gently to make sure it is correctly connected. - If there are any damages or scratches on the tube surface or an oval shape, air leakage and tube release may occur. Check it carefully. - The OD of polyurethane tubes expand when pressure is applied. Reinsertion into the fitting may not be possible. Check the OD of the tube and change the tube if the expansion is serious. - Always remove by cutting the part of the tube previously inserted into the fitting. Use a proper tube cutter in order to cut the tube.
DISCONNECTION OF THE TUBE FROM THE FITTING - Make sure the pressure is zero before releasing the tube from the fitting. - To release the tube, press the release ring regularly at the end and pull the tube with one hand.

Ø TUBO Ø TUBE	TOLLERANZA TOLERANCE	LUNGHEZZA INSERIMENTO TUBO TUBE INSERTION LENGHT
4	± 0,1	14
6	± 0,1	15,5
8	± 0,1	17,5
10	± 0,15	19
12	± 0,15	21

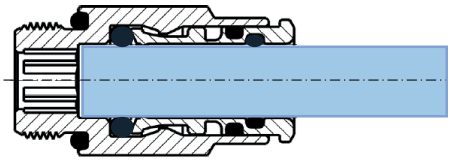

PA1002

RACCORDO DRITTO FIL. MASCHIO BSPP ESAGONO INTERNO CON OR NBR
STRAIGHT MALE PLUG BSPP THREAD INNER HEXAGON WITH NBR OR

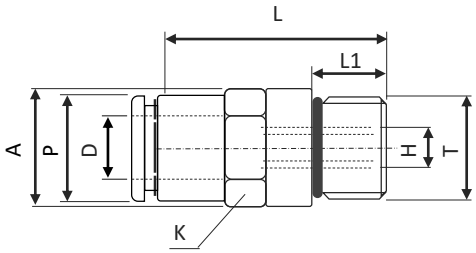

Codice - Code	ØA	K	ØD	H	L	L1	L2	ØP	T
PA1002-04-G018	14	12	4	2,5	23,8	6	-	8,8	G1/8"
PA1002-06-G018	14	12	6	4	27	6	-	11,7	G1/8"
PA1002-06-G014	16	15	6	4	28	7	-	11,7	G1/4"
PA1002-08-G018	15	14	8	5	32,5	6	-	13,7	G1/8"
PA1002-08-G014	16	15	8	6	31	7	-	13,7	G1/4"
PA1002-10-G014	19	17	10	7	36,5	7	-	16,3	G1/4"
PA1002-10-G038	21	19	10	8	31	7	-	16,3	G3/8"
PA1002-12-G038	21	19	12	9	30,5	7	-	18,4	G3/8"
PA1002-12-G012	25	22	12	9	31,5	7	-	18,4	G1/2"

PA1004

RACCORDO A GOMITO GIREVOLE FILETTO MASCHIO BSPP
SWIVEL MALE ELBOW PLUG BSPP & METRIC

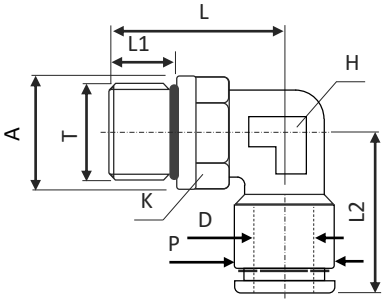

Codice - Code	ØA	K	ØD	H	L	L1	L2	ØP	T
PA1004-04-G018	14	12	4	9	20,6	6	21,5	10	G1/8"
PA1004-06-G018	14	12	6	10	21	6	26	12,5	G1/8"
PA1004-06-G014	16	15	6	10	23	7	26	12,5	G1/4"
PA1004-08-G018	15	12	8	12	22	6	29	14,5	G1/8"
PA1004-08-G014	16	15	8	12	24	7	29	14,5	G1/4"
PA1004-10-G014	19	15	10	13	26,5	7	31,5	16,8	G1/4"
PA1004-10-G038	21	19	10	13	25,5	7	31,5	16,8	G3/8"
PA1004-12-G038	21	19	10	15	27,5	7	33	19	G1/4"
PA1004-12-G012	25	22	10	15	29,5	8	33	19	G3/8"

PA1006

RACCORDO A "T" GIREVOLE FILETTO MASCHIO BSPP
SWIVEL MALE TEE PLUG BSPP & METRIC THREAD

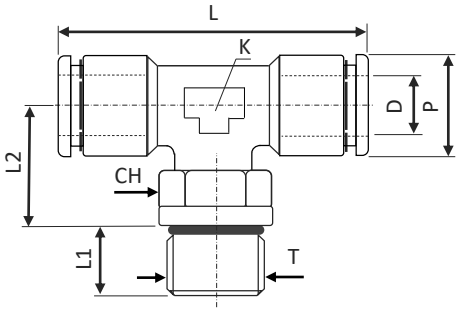

Codice - Code	ØA	ØD	CH	L	L1	L2	ØP	T
PA1006-04-G018	14	4	12	43	6	20,5	10	G1/8"
PA1006-06-G018	14	6	12	52	6	21	12,5	G1/8"
PA1006-08-G018	15	8	12	58	6	22	12,5	G1/8"
PA1006-08-G014	16	8	15	58	7	24	14,5	G1/4"

PA1007

NIPPLO DI GIUNZIONE IN LINEA PER TUBO METRICO
STRAIGHT UNION CONNECTOR METRIC TUBE

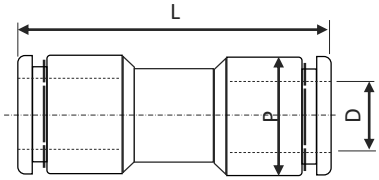

Codice - Code	ØD	L	L1	ØP
PA1007-04-04	4	38	-	10
PA1007-06-06	6	45	-	12,5
PA1007-08-08	8	48	-	14,5

PA1008

NIPPLO DI GIUNZIONE A GOMITO
UNION ELBOW METRIC TUBE

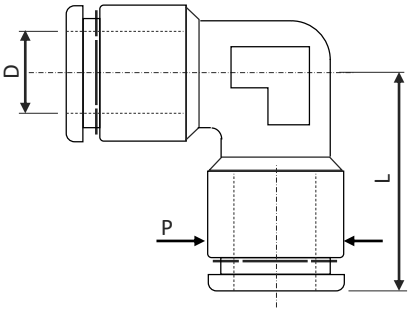

Codice - Code	ØD	H	L	L1	ØP
PA1008-04-04	4	-	22	-	10
PA1008-06-06	6	-	26	-	12,5
PA1008-08-08	8	-	29	-	14,5
PA1008-10-10	10	-		-	
PA1008-12-12	12	-		-	

PA1009

NIPPLO DI GIUNZIONE A "T"
UNION TEE METRIC TUBE

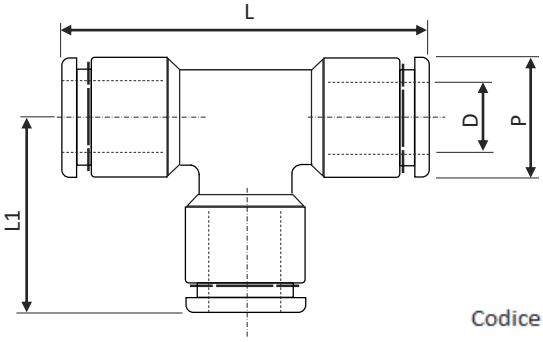

Codice - Code	ØD	H	L	L1	ØP
PA1009-04-04	4	-	43	22	10
PA1009-06-06	6	-	52	26	12,5
PA1009-08-08	8	-	58	29	14,5
PA1009-10-10	10	-			
PA1009-12-12	12	-			

PA1600

Innesti rapidi in ottone nichelato standard Iso 14743, robusti ma compatti, utilizzabili con tubazioni in Poliammide, Polietilene e Poliuretano, per aria, aria compressa e vuoto.

Nickel-plated quick couplings with, Iso 14743 norm. Adapt for use with Polyamide, Polyurethane and Polyetylene hoses, for fluids as air, compressed air and vacuum.

CARATTERISTICHE TECNICHE e DI FUNZIONAMENTO

CORPO: Ottone Nichelato UNI EN 12164 CW614N & UNI EN 12164 CW617N
COLLARE: POM
COLLETTO: Ottone Nichelato UNI EN 12164 CW164N
GUARNIZIONE: NBR senza silicone
PINZA: Acciaio Inox AISI 301
DISTANZIALE: NBR
ANELLO DI TENUTA: Acciaio Inox AISI 316
Pressione max. di esercizio: 16 Bar
Range temperatura di esercizio: -20 / +80°C
Filetti Gas conici BSPT ISO 7; Gas cilindrici BSPP ISO 228; metrici ISO 262

TECHNICAL AND WORKING FEATURES

BODY: nickel plated brass UNI EN 12164 CW614N & UNI EN 12164 CW617N
COLLAR: POM
COLLET (sleeve): nickel plated brass UNI EN 12164 CW614N
Seals: NBR silicon free
LOCK CLAW: AISI 301 Stainless steel Back
O-RING: NBR
RETAINING RING for swivel systems: AISI 302 Stainless steel
Max. working pressure: 16 Bar
Working temperature range: -20 / +80°C
Threads: BSPT ISO 7; BSPP ISO 228; Metric ISO 262

INSERIMENTO DEL TUBO AL RACCORDO
Assicurarsi che il tubo sia sempre inserito completamente fino a battuta. Tagliare il tubo a 90°, inserirlo fino a battuta e tirarlo con accuratezza per accertare il corretto inserimento. Se ci sono danni o imperfezioni sulla superficie del tubo o se lo stesso risulta ovalizzato, si possono verificare perdite d'aria o una imprevista disconnessione.
Il diametro esterno del tubo in poliuretano si espande in base alla pressione applicata, in tal caso tagliare l'estremità del tubo precedentemente connesso per poterlo riutilizzare.
DISCONNESSIONE DEL TUBO DAL RACCORDO
Accertarsi che il tubo non sia in pressione prima della disconnessione. Premere l'anello di sgancio, tirare ed estrarre il tubo contemporaneamente.

INSERTION OF THE TUBE INTO THE FITTING - Make sure the tube is fully inserted into the fitting. - To insert the tube into the fitting cut the tube at a squared angle (90°), insert up to the end and pull gently to make sure it is correctly connected. - If there are any damages or scratches on the tube surface or an oval shape, air leakage and tube release may occur. Check it carefully. The OD of polyurethane tubes expand when pressure is applied. Reinsertion into the fitting may not be possible. Check the OD of the tube and change the tube if the expansion is serious. - Always remove by cutting the part of the tube previously inserted into the fitting. Use a proper tube cutter in order to cut the tube.
DISCONNECTION OF THE TUBE FROM THE FITTING - Make sure the pressure is zero before releasing the tube from the fitting. - To release the tube, press the release ring regularly at the end and pull the tube with one hand.

Ø TUBO Ø TUBE	TOLLERANZA TOLERANCE	LUNGHEZZA INSERIMENTO TUBO TUBE INSERTION LENGHT
4	± 0,1	14
6	± 0,1	15,5
8	± 0,1	17,5
10	± 0,15	19
12	± 0,15	21

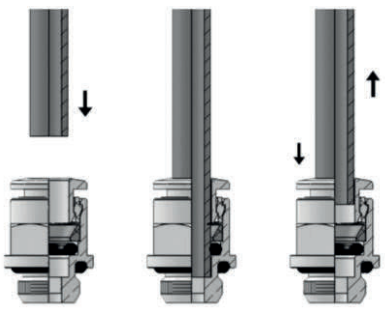

PA1601

RACCORDO DRITTO FILETTO MASCHIO BSPT ESAGONO INTERNO
STRAIGHT MALE PLUG BSPT THREAD INT. HEXAGON

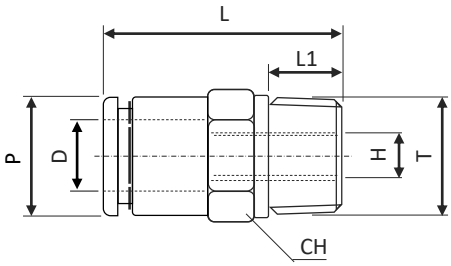

Codice - Code	CH	ØD	H	L	L1	ØP	T
PA1601-04-R018	12	4	3	18,5	5,5	8,8	R1/8"
PA1601-04-R014	14	4	3	19,5	7	8,8	R1/4"
PA1601-06-R018	12	6	4	22	5,5	11,7	R1/8"
PA1601-06-R014	14	6	4	21	7	11,7	R1/4"
PA1601-08-R018	14	8	5	25	5,5	13,7	R1/8"
PA1601-08-R014	14	8	6	24	7	13,7	R1/4"
PA1601-08-R038	19	8	6	23,5	8	13,7	R3/8"
PA1601-10-R014	17	10	7	28,5	7	15,4	R1/4"
PA1601-10-R038	19	10	8	25,5	8	15,4	R3/8"
PA1601-10-R012	22	10	8	25	9	16	R1/2"
PA1601-12-R014	19	12	7	29,5	7	18,3	R1/4"
PA1601-12-R038	19	12	9	28,5	8	18,3	R3/8"
PA1601-12-R012	22	12	10	25	9	18,3	R1/2"
PA1601-14-R038	22	14	9	30,5	8	20,5	R3/8"
PA1601-14-R012	22	14	12	26,5	9	20,5	R1/2"
PA1601-16-R012	24	16	-	32	9	23,5	R1/2"

PA1602

RACCORDO DRITTO FILETTO MASCHIO BSPP ESAGONO INTERNO OR NBR
STRAIGHT MALE PLUG BSPP THREAD INNER HEXAGON WITH NBR OR

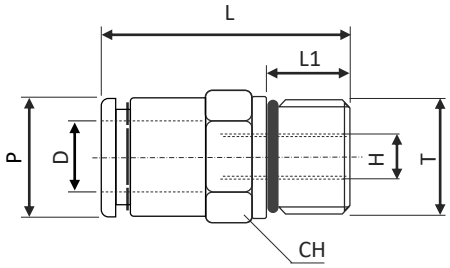

Codice - Code	CH	ØD	H	L	L1	ØP	T
PA1602-04-M005	8	4	2	20	4	7,8	M5
PA1602-04-G018	12	4	3	19	6	8,8	G1/8"
PA1602-06-M005	12	6	2	22	4	11,7	M5
PA1602-06-G018	12	6	4	21	6	11,7	G1/8"
PA1602-06-G014	15	6	4	22	7	11,7	G1/4"
PA1602-08-G018	14	8	5	26	6	13,7	G1/8"
PA1602-08-G014	15	8	6	24,5	7	13,7	G1/4"
PA1602-08-G038	19	8	6	23	7	13,7	G3/8"
PA1602-10-G014	17	10	7	30	7	15,4	G1/4"
PA1602-10-G038	19	10	8	24,5	7	15,4	G3/8"
PA1602-10-G012	22	10	8	25	8	15,4	G1/2"
PA1602-12-G014	19	12	7	29,5	7	18,3	G1/4"
PA1602-12-G038	19	12	9	24	7	18,3	G3/8"
PA1602-12-G012	22	12	9	24,5	8	18,3	G1/2"
PA1602-14-G038	22	14	10	30,5	7	20,5	G3/8"
PA1602-14-G012	22	14	10	25,5	8	20,5	G1/2"
PA1602-16-G012	24	16	-	33,5	8	23,5	G1/2"

PA1607

NIPPLO DI GIUNZIONE IN LINEA PER TUBO METRICO
UNION CONNECTOR METRIC TUBE

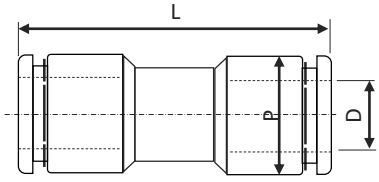

Codice - Code	CH	ØD	H	L	L1	ØP	T
PA1607-04-04	-	4	-	29	-	9	-
PA1607-06-06	-	6	-	34	-	12	-
PA1607-08-08	-	8	-	37	-	14	-
PA1607-10-10	-	10	-	41,5	-	17	-
PA1607-12-12	-	12	-	39,5	-	19	-
PA1607-14-14	-	14	-	41,5	-	21	-

PA1616

RACCORDO A GOMITO FILETTO MASCHIO BSPT
MALE ELBOW PLUG BSPT THREAD

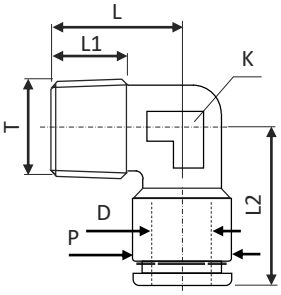

Codice - Code	CH	ØD	K	L	L1	L2	ØP	T
PA1616-04-R018	-	4	8	15	7,5	17,5	9	R1/8"
PA1616-04-R014	-	4	9	23	12	19	9	R1/4"
PA1616-06-R018	-	6	9	22	7,5	20	12,7	R1/8"
PA1616-06-R014	-	6	9	23	12	20	12,7	R1/4"
PA1616-08-R018	-	8	11	24	6,5	22,5	14,2	R1/8"
PA1616-08-R014	-	8	11	24	12,5	22,5	14,2	R1/4"
PA1616-08-R038	-	8	12	26	11,5	24,5	14,2	R3/8"
PA1616-10-R014	-	10	13	28	11,5	26	16,5	R1/4"
PA1616-10-R038	-	10	13	28	12	26	16,5	R3/8"
PA1616-12-R014	-	12	15	33	11	26,5	19,5	R1/4"
PA1616-12-R038	-	12	15	33	11,5	26,5	19,5	R3/8"

PA1604

RACCORDO A GOMITO GIREVOLE FILETTO MASCHIO BSPP
SWIVEL MALE ELBOW PLUG BSPP & METRIC

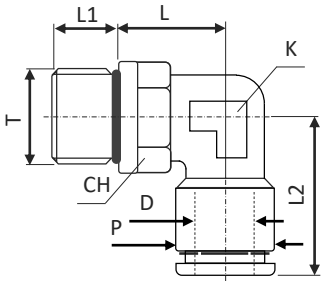

Codice - Code	CH	ØD	K	L	L1	L2	ØP	T
PA1604-04-M005	8	4	8	12,5	4	17,5	9	M5
PA1604-04-G018	12	4	8	14,5	6	17,5	9	G1/8"
PA1604-04-G014	15	4	8	15,5	7	17,5	9	G1/4"
PA1604-06-M005	10	6	9	13	4	20	12,7	M5x0,8
PA1604-06-G018	12	6	9	15	6	20	12,7	G1/8"
PA1604-06-G014	15	6	9	16	7	20	12,7	G1/4"
PA1604-08-G018	12	8	11	16	6	22,5	14,2	G1/8"
PA1604-08-G014	15	8	11	17	7	22,5	14,2	G1/4"
PA1604-08-G038	19	8	11	19,5	7	22,5	14,2	G3/8"
PA1604-10-G014	15	10	13	19,5	7	26	16,5	G1/4"
PA1604-10-G038	19	10	13	20,5	7	26	16,5	G3/8"
PA1604-10-G012	22	10	13	20	8	26	16,5	G1/2"
PA1604-12-G014	17	12	15	20,5	7	26,5	19,5	G1/4"
PA1604-12-G038	19	12	15	21,5	7	26,5	19,5	G3/8"
PA1604-12-G012	22	12	15	21,5	8	26,5	19,5	G1/2"
PA1604-14-G038	19	14	17	21,5	7	28,5	21,5	G3/8"
PA1604-14-G012	22	14	17	22,5	8	28,5	21,5	G1/2"

PA1615

RACCORDO A 45° GIREVOLE FILETTO MASCHIO BSPP
45° SWIVEL MALE PLUG BSPP

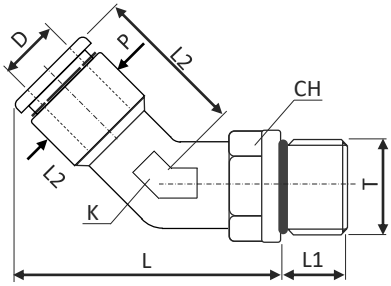

Codice - Code	CH	ØD	K	L	L1	L2	ØP	T
PA1615-06-G018	12	6	11	32,5	5,5	20,5	12,7	G1/8"
PA1615-06-G014	14	6	11	34,5	7	20,5	12,7	G1/4"
PA1615-08-G018	12	8	11	32,5	5,5	22,5	14,2	G1/8"
PA1615-08-G014	14	8	11	34,5	7	22,5	14,2	G1/4"
PA1615-08-G038	19	8	11	35	8	22,5	14,2	G3/8"
PA1615-10-G014	17	10	15	39,5	7	26,5	16,5	G1/4"
PA1615-10-G038	19	10	15	39,5	8	26,5	16,5	G3/8"
PA1615-10-G012	22	10	15	40	9	26,5	16,5	G1/2"
PA1615-12-G014	17	12	15	40,5	7	26,5	19,5	G1/4"
PA1615-12-G038	19	12	15	40,5	8	26,5	19,5	G3/8"
PA1615-12-G012	22	12	15	41	9	26,5	19,5	G1/2"

PA1617

RACCORDO AD Y GIREVOLE FILETTO MASCHIO BSPT
BSPT SWIVEL MALE PLUG Y

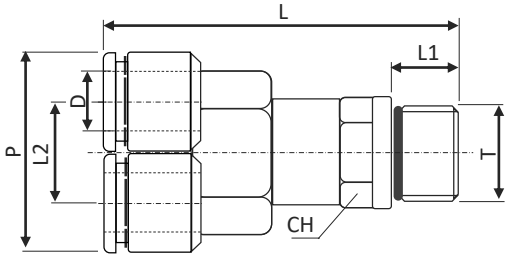

Codice - Code	CH	ØD	K	L	L1	L2	ØP	T
PA1617-04-M005	-	4	-	26,5	4	9	18	M5
PA1617-04-R018	-	4	-	29,5	4	12,5	24,5	R1/8"
PA1617-06-M005	12	6	-	38	5,5	9	18	M5x0,8
PA1617-06-R018	12	6	-	41,5	5,5	12,5	24,5	R1/8"
PA1617-08-R018	14	8	-	48,5	5,5	14,5	28,5	R1/8"
PA1617-08-R014	14	8	-	50	7	14,5	28,5	R1/4"

PA1614

RACCORDO A "T" CON UN LATO GIREVOLE FILETTO MASCHIO BSPP
ONE SIDE SWIVEL MALE TEE PLUG BSPP & METRIC THREAD

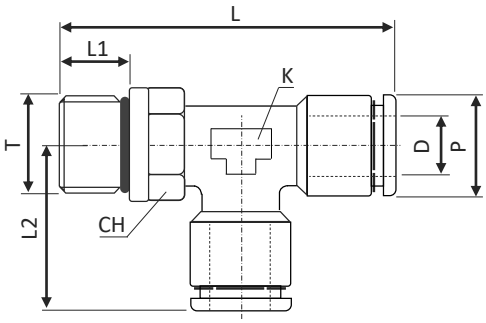

Codice - Code	ØD	CH	K	L	L1	L2	ØP	T
PA1614-04-M005	4	8	8	34	4	17,5	9	M5
PA1614-04-G018	4	12	8	38	6	17,5	9	G1/8"
PA1614-06-G018	6	12	9	41	6	20	12,7	G1/8"
PA1614-06-G014	6	15	9	43	7	20	12,7	G1/4"
PA1614-08-G018	8	12	11	44,5	6	22,5	14,2	G1/8"
PA1614-08-G014	8	15	11	46,5	7	22,5	14,2	G1/4"
PA1614-08-G038	8	19	11	46,5	7	22,5	14,2	G3/8"
PA1614-10-G014	10	15	13	52,5	7	26	16,5	G1/4"
PA1614-10-G038	10	19	13	52,5	7	26	16,5	G3/8"
PA1614-12-G014	12	17	15	53,5	7	26,5	16,5	G1/4"
PA1614-12-G038	12	19	15	54	7	26,5	19,5	G3/8"

PA1606

RACCORDO A "T" CON BASE GIREVOLE FILETTO MASCHIO BSPP
BASE SWIVEL MALE TEE PLUG BSPP & METRIC THREAD

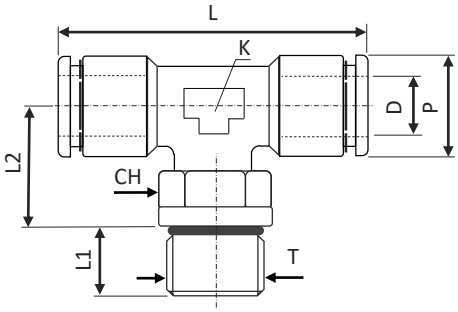

Codice - Code	ØD	CH	K	L	L1	L2	ØP	T
PA1606-04-M005	4	8	8	35	4	12,5	9	M5
PA1606-04-G018	4	12	8	35	6	14,5	9	G1/8"
PA1606-06-G018	6	12	9	40	6	15	12,7	G1/8"
PA1606-06-G014	6	15	9	40	7	16	12,7	G1/4"
PA1606-08-G018	8	12	11	45	6	16	14,2	G1/8"
PA1606-08-G014	8	15	11	45	7	17	14,2	G1/4"
PA1606-08-G038	8	19	11	45	7	17	14,2	G3/8"
PA1606-10-G014	10	15	13	52	7	19,5	16,5	G1/4"
PA1606-10-G038	10	19	13	52	7	19,5	16,5	G3/8"
PA1606-12-G014	12	17	15	53	7	20	16,5	G1/4"
PA1606-12-G038	12	19	15	53	7	20,5	19,5	G3/8"

PA1608

NIPPLO DI GIUNZIONE A GOMITO
UNION ELBOW METRIC TUBE

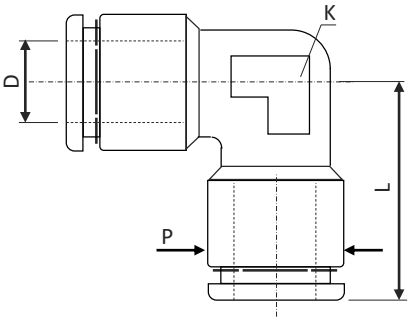

Codice - Code	ØD	K	L	L1	ØP
PA1608-04-04	4	8	17,5	-	9
PA1608-06-06	6	9	20	-	12,7
PA1608-08-08	8	11	22,5	-	14,2
PA1608-10-10	10	13	26	-	16,5
PA1608-12-12	12	15	26,5	-	19,5
PA1608-14-14	12	17	28,5	-	21,5

PA1609

NIPPLO DI GIUNZIONE A “T”
UNION TEE METRIC TUBE

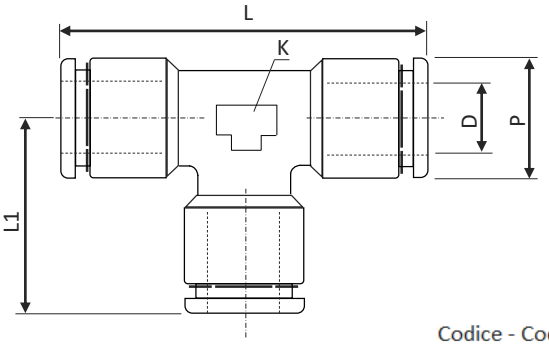

Codice - Code	ØD	K	L	L1	ØP
PA1609-04-04	4	8	35	17,5	9
PA1609-06-06	6	9	40	20	12,7
PA1609-08-08	8	11	45	22,5	14,2
PA1609-10-10	10	13	52	26	16,5
PA1609-12-12	12	15	53	26,5	19,5
PA1609-14-14	12	17	57	28,5	21,5

PA1200

Innesti rapidi in acciaio inossidabile AISI 316, standard Iso 14743, robusti ma compatti, utilizzabili con tubazioni in Poliammide, Polietilene PTFE e FEP, per compressa, acqua e liquidi compatibili con l'Inox.

Stainless steel AISI 316 quick couplings, Iso 14743 norm. Adapt for use with Polyamide, Polyurethane and PTFE, FEP hoses, for fluids as compressed air, water and various liquids according to Stailess steel construction.

CARATTERISTICHE TECNICHE DI FUNZIONAMENTO

Corpo: Acciaio inox AISI 316
Colletto: Acciaio inox AISI 316
Guarnizioni: FKM
Pinza: Acciaio inox AISI 303
Anello di tenuta per sistemi girevoli: Acciaio inox AISI 302
Pressione max. di esercizio: 20 Bar
Range di temperatura di esercizio: -20 / +150°C
Filetti Gas conici BSPT ISO 7; Gas cilindrici BSPP ISO 228; metrici ISO 262

TECHNICAL AND WORKING FEATURES

Body: Stainless steel AISI 316 ASTM A-479 for SXC, SXMM, SXUC, SXGJ, SXTR, Stainless steel AISI 316 ASTM A-182 for all the other fittings
Collet: Stainless steel AISI 316
Lock claw: Stainless steel AISI 303
Seals: FKM
Retaining ring for swivel systems: AISI 302 Stainless steel (1.4310)
Max. working pressure: 20 Bar
Working temperature range: -20 / +150°C
Threads: BSPT ISO 7; BSPP ISO 228; Metric ISO 262

INSERIMENTO DEL TUBO AL RACCORDO
Assicurarsi che il tubo sia sempre inserito completamente fino a battuta. Tagliare il tubo a 90°, inserirlo fino a battuta e tirarlo con accuratezza per accertare il corretto inserimento. Se ci sono danni o imperfezioni sulla superficie del tubo o se lo stesso risulta ovalizzato, si possono verificare perdite d'aria o una imprevista disconnessione.
Il diametro esterno del tubo in poliuretano si espande in base alla pressione applicata, in tal caso tagliare l'estremità del tubo precedentemente connesso per poterlo riutilizzare.
DISCONNESSIONE DEL TUBO DAL RACCORDO
Accertarsi che il tubo non sia in pressione prima della disconnessione. Premere l'anello di sgancio, tirare ed estrarre il tubo contemporaneamente.

INSERTION OF THE TUBE INTO THE FITTING - Make sure the tube is fully inserted into the fitting. - To insert the tube into the fitting cut the tube at a squared angle (90°), insert up to the end and pull gently to make sure it is correctly connected. - If there are any damages or scratches on the tube surface or an oval shape, air leakage and tube release may occur. Check it carefully. The OD of polyurethane tubes expand when pressure is applied. Reinsertion into the fitting may not be possible. Check the OD of the tube and change the tube if the expansion is serious. - Always remove by cutting the part of the tube previously inserted into the fitting. Use a proper tube cutter in order to cut the tube.
DISCONNECTION OF THE TUBE FROM THE FITTING - Make sure the pressure is zero before releasing the tube from the fitting. - To release the tube, press the release ring regularly at the end and pull the tube with one hand.

Ø TUBO Ø TUBE	TOLLERANZA TOLERANCE	LUNGHEZZA INSERIMENTO TUBO TUBE INSERTION LENGHT
4	± 0,1	14
6	± 0,1	15,5
8	± 0,1	17,5
10	± 0,15	19
12	± 0,15	21

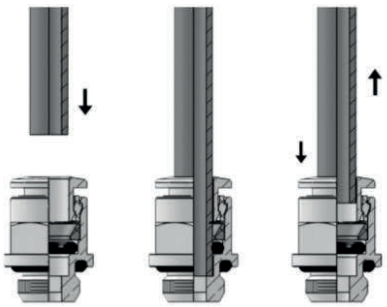

PA1201

RACCORDO FILETTO MASCHIO BSPT ESAGONO INTERNO
MALE CONNECTOR BSPT THREAD INT. HEXAGON

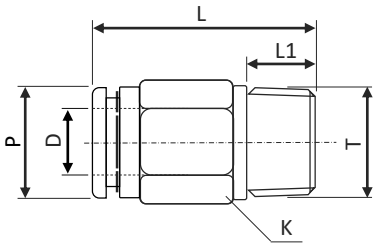

Codice - Code	K	K1	ØD	H	L	L1	L2	ØP	T
PA1201-04-R018	11	-	4	3	22,6	7,5	-	10	R1/8"
PA1201-04-R014	14	-	4	3	23,3	11	-	10	R1/4"
PA1201-06-R018	13	-	6	4	23,3	7,5	-	12,4	R1/8"
PA1201-06-R014	14	-	6	4	22,8	11	-	12,4	R1/4"
PA1201-08-R018	14	-	8	5	26,3	7,5	-	14	R1/8"
PA1201-08-R014	14	-	8	6	26,3	11	-	14	R1/4"
PA1201-10-R014	17	-	10	6	29,3	11	-	16,5	R1/4"
PA1201-10-R038	17	-	10	8	26,8	12	-	16,5	R3/8"
PA1201-12-R014	20,6	-	12	8	31	11	-	19	R1/4"
PA1201-12-R038	20,6	-	12	6	28,2	12	-	19	R3/8"
PA1201-12-R012	22	-	12	10	28,2	15	-	19	R1/2"
PA1201-14-R012	22	-	14	10	32,2	15	-	21,8	R1/2"

PA1202

RACCORDO FILETTO MASCHIO BSPP ESAGONO INTERNO OR FKM
MALE CONNECTOR BSPP THREAD INT. HEXAGON WITH FKM OR

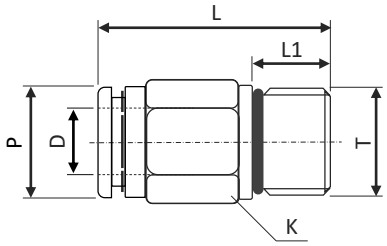

Codice - Code	K	K1	ØD	H	L	L1	L2	ØP	T
PA1202-04-M005	11	-	4	-	23,8	5	-	10	M5
PA1202-04-G018	14	-	4	-	22,8	5,8	-	10	G1/8"
PA1202-04-G014	17	-	4	-	23,8	7,5	-	10	G1/4"
PA1202-06-M005	11	-	6	-	23,3	5,5	-	12,4	M5
PA1202-06-G018	14	-	6	-	24,3	5,8	-	12,4	G1/8"
PA1202-06-G014	17	-	6	-	23,3	7,5	-	12,4	G1/4"
PA1202-08-G018	14	-	8	-	25,3	5,8	-	14	G1/8"
PA1202-08-G014	17	-	8	-	24	7,5	-	14	G1/4"
PA1202-08-G038	20,6	-	8	-	23,8	7,5	-	14	G3/8"
PA1202-10-G014	17	-	10	-	27,4	7,5	-	16,5	G1/4"
PA1202-10-G038	20,6	-	10	-	24,3	7,5	-	16,5	G3/8"
PA1202-12-G014	17	-	12	-	28,4	7,5	-	19	G1/4"
PA1202-12-G038	20,6	-	12	-	28,4	7,5	-	19	G3/8"
PA1202-12-G012	27	-	12	-	28,4	10	-	19	G1/2"
PA1202-14-G018	27	-	14	-	29,2	10	-	21,8	G1/2"

PA1204

RACCORDO A GOMITO GIREVOLE FILETTO MASCHIO BSPP OR FKM
SWIVEL MALE ELBOW BSPP & METRIC WITH FKM OR

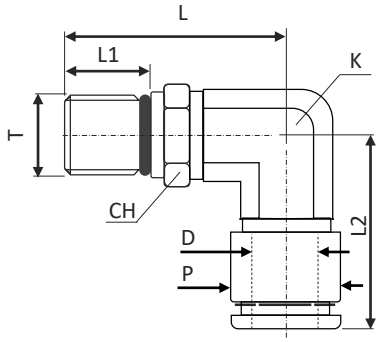

Codice - Code	CH	K	ØD	L	L1	L2	ØP	T
PA1204-04-M005	10	11	4	24	5	20	10	M5
PA1204-04-G018	10	14	4	24,9	5,8	20	10	G1/8"
PA1204-04-G014	10	17	4	26,8	7,5	20	10	G1/4"
PA1204-06-M005	12	11	6	25,8	5	22	12,4	M5
PA1204-06-G018	12	14	6	26	5,8	22	12,4	G1/8"
PA1204-06-G014	12	17	6	28	7,5	22	12,4	G1/4"
PA1204-08-G018	14	14	8	27	5,8	23	14	G1/8"
PA1204-08-G014	14	17	8	29	7,5	23	14	G1/4"
PA1204-08-G038	14	20,6	8	29,5	7,5	23	14	G3/8"
PA1204-10-G014	16	17	10	30,3	7,5	24	16,5	G1/4"
PA1204-10-G038	16	20,6	10	30,7	7,5	24	16,5	G3/8"
PA1204-12-G014	19	19	12	32,8	7,5	27	19	G1/4"
PA1204-12-G038	19	20,6	12	32,6	7,5	27	19	G3/8"
PA1204-12-G012	19	27	12	35,8	10	27	19	G1/2"
PA1204-14-G012	22	27	14	38,4	10	29	21,8	G1/2"

PA1206

RACCORDO A "T" GIREVOLE FILETTO MASCHIO BSPP OR FKM
SWIVEL MALE TEE BSPP & METRIC THREAD WITH FKM OR

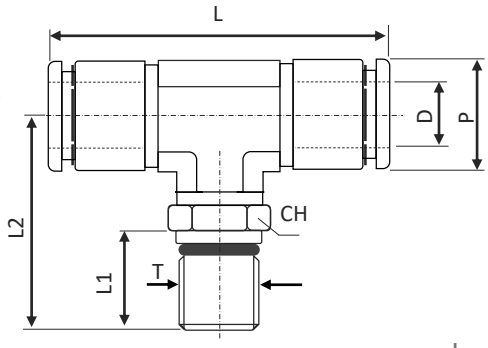

Codice - Code	CH	K	ØD	L	L1	L2	ØP	T
PA1206-04-M005	10	11	4	40,6	5	24	10	M5
PA1206-04-G018	10	14	4	40,6	5,8	25	10	G1/8"
PA1206-04-G014	10	17	4	40,6	7,5	27	10	G1/4"
PA1206-06-G018	12	14	6	44,2	5,8	26	12,4	G1/8"
PA1206-06-G014	12	17	6	44,2	7,5	28	12,4	G1/4"
PA1206-08-G018	14	14	8	46,4	5,8	27	14	G1/8"
PA1206-08-G014	14	17	8	46,4	7,5	29	14	G1/4"
PA1206-08-G038	14	20,6	8	46,4	7,5	30	14	G3/8"
PA120610-G014	16	17	10	48,6	7,5	30	16,5	G1/4"
PA120610-G038	16	20,6	10	48,6	7,5	31	16,5	G3/8"
PA1206-12-G014	19	19	12	53,4	7,5	33	19	G1/4"
PA1206-12-G038	19	20,6	12	53,4	7,5	33	19	G3/8"
PA1206-12-G012	19	27	12	53,4	10	36	19	G1/2"
PA1206-14-G038	22	22	14	57,4	7,5	35	21,8	G3/8"
PA1206-14-G012	22	27	14	57,4	11	38	21,8	G1/2"

PA1207

NIPPLO DI GIUNZIONE IN LINEA
UNION CONNECTOR METRIC TUBE

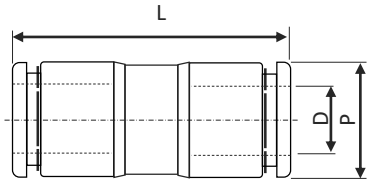

Codice - Code	ØD	K	L	L1	ØP
PA1207-04-04	4	-	34,6	-	10
PA1207-06-06	6	-	35,6	-	12,4
PA1207-08-08	8	-	35,6	-	14
PA1207-10-10	10	-	35,6	-	16,5
PA1207-12-12	12	-	38,8	-	19
PA1207-14-14	14	-	40,8	-	21,8

PA1208

NIPPLO DI GIUNZIONE A GOMITO
UNION ELBOW METRIC TUBE

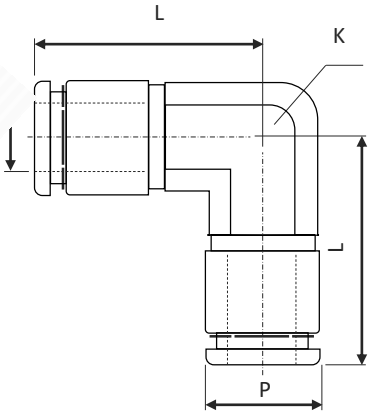

Codice - Code	ØD	K	L	L1	ØP
PA1208-04-04	4	10	20,3	-	10
PA1208-06-06	6	12	22	-	12,4
PA1208-08-08	8	14	23,2	-	14
PA1208-10-10	10	16	24,3	-	16,5
PA1208-12-12	12	19	26,7	-	19,5
PA1208-14-14	14	22	28,7	-	21,8

PA1209

NIPPLO DI GIUNZIONE A “T”
UNION TEE METRIC TUBE

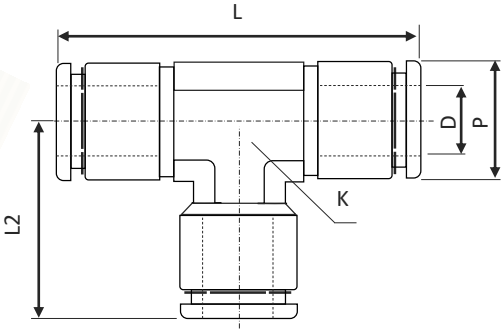

Codice - Code	ØD	K	L	L1	ØP
PA1209-04-04	4	10	40,6	20,3	10
PA1209-06-06	6	12	44	22	12,4
PA1209-08-08	8	14	46,4	23,2	14
PA1209-10-10	10	16	48,6	24,3	16,5
PA1209-12-12	12	19	53,4	26,7	19
PA1209-14-14	14	22	57,4	28,7	21,8

PA1300

Innesti rapidi calzamento in ottone nichelato, particolarmente robusti nel sistema di fissaggio del tubo, utilizzabili con tubazioni in Poliammide, Polietilene, PTFE e FEP e Poliuretano, per aria compressa, acqua e liquidi compatibili con l'ottone.

Nickel-plated push-in quick couplings with high resistance hose locking system, adapt for use with Polyamide, Polyurethane, PTFE, FEP and Polyetylene hoses, for fluids as air, compressed air and vacuum.

CARATTERISTICHE TECNICHE DI FUNZIONAMENTO

Corpo: ottone nichelato UNI EN 12164 CW 614N nichelato o UNI EN 12165 CW 617N nichelato
Guarnizioni: NBR
Pressione max. di esercizio: 18 Bar
Range di temperatura di esercizio: -20 / +100°C
Filetti Gas conici BSPT ISO 7; Gas cilindrici BSPP ISO 228; metrici ISO 262

TECHNICAL AND WORKING FEATURES

Body: Nickel plated brass UNI EN 12164 CW 614N AND UNI EN12165 CW 617N
Seals: NBR
Max. working pressure: 18 Bar
Working temperature range: -20 / +100°C
Threads: BSPT ISO 7; BSPP ISO 228; Metric ISO 262

INSERIMENTO DEL TUBO AL RACCORDO
Assicurarsi che il tubo sia sempre inserito completamente fino a battuta. Tagliare il tubo a 90°, inserirlo fino a battuta e tirarlo con accuratezza per accertare il corretto inserimento. Se ci sono danni o imperfezioni sulla superficie del tubo o se lo stesso risulta ovalizzato, si possono verificare perdite d'aria o una imprevista disconnessione.
Il diametro esterno del tubo in poliuretano si espande in base alla pressione applicata, in tal caso tagliare l'estremità del tubo precedentemente connesso per poterlo riutilizzare.
DISCONNESSIONE DEL TUBO DAL RACCORDO
Accertarsi che il tubo non sia in pressione prima della disconnessione. Premere l'anello di sgancio, tirare ed estrarre il tubo contemporaneamente.

INSERTION OF THE TUBE INTO THE FITTING - Make sure the tube is fully inserted into the fitting. - To insert the tube into the fitting cut the tube at a squared angle (90°), insert up to the end and pull gently to make sure it is correctly connected. - If there are any damages or scratches on the tube surface or an oval shape, fluid leakage and tube release may occur. Check it carefully. The OD of polyurethane tubes expand when pressure is applied. Reinsertion into the fitting may not be possible. Check the OD of the tube and change the tube if the expansion is serious. - Always remove by cutting the part of the tube previously inserted into the fitting. Use a proper tube cutter in order to cut the tube. DISCONNECTION OF THE TUBE FROM THE FITTING - Make sure the pressure is zero before releasing the tube from the fitting. - To release the tube, press the release ring regularly at the end and pull the tube with one hand.

Ø TUBO Ø TUBE	TOLLERANZA TOLERANCE	LUNGHEZZA INSERIMENTO TUBO TUBE INSERTION LENGHT
4	± 0,1	14
6	± 0,1	15,5
8	± 0,1	17,5
10	± 0,15	19
12	± 0,15	21

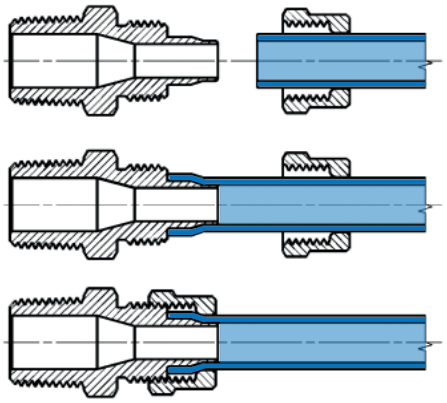

PA1301

RACCORDO FILETTO MASCHIO BSPT
MALE CONNECTOR BSPT

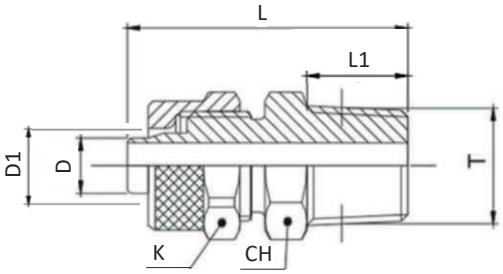

Codice - Code	ØD	ØD1	CH	K	L1	L	T
PA1301-0406-R018	4	6	12	12	8	27,5	R1/8"
PA1301-0406-R014	4	6	14	12	11	31	R1/4"
PA1301-0406-R038	4	6	17	12	11,5	31,5	R3/8"
PA1301-0608-R018	6	8	12	14	8	27,5	R1/8"
PA1301-0608-R014	6	8	14	14	11	31	R1/4"
PA1301-0608-R038	6	8	17	14	11,5	31,5	R3/8"
PA1301-0810-R018	8	10	14	16	8	29,5	R1/8"
PA1301-0810-R014	8	10	14	16	11	32,5	R1/4"
PA1301-0810-R038	8	10	17	16	11,5	33	R3/8"
PA1301-0810-R012	8	10	22	16	14	36	R1/2"
PA1301-1012-R038	10	12	17	18	11,5	34,5	R3/8"
PA1301-1012-R012	10	12	22	18	14	37,5	R1/2"
PA1301-1215-R012	10	15	22	22	14	39,5	R1/2"

PA1311

RACCORDO FILETTO MASCHIO BSPP
MALE CONNECTOR BSPP THREAD

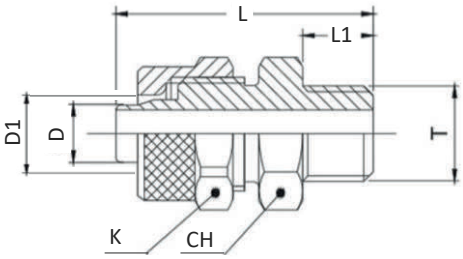

Codice - Code	ØD	ØD1	CH	K	L1	L	T
PA1311-0406-G018	4	6	14	12	6	25,5	G1/8"
PA1311-0406-G014	4	6	17	12	8	28	G1/4"
PA1311-0406-G038	4	6	19	12	9	29	G3/8"
PA1311-0608-G018	6	8	14	14	6	25,5	G1/8"
PA1311-0608-G014	6	8	17	14	8	28	G1/4"
PA1311-0608-G038	6	8	19	14	9	29	G3/8"
PA1311-0810-G018	8	10	14	16	6	27	G1/8"
PA1311-0810-G014	8	10	17	16	8	29,5	G1/4"
PA1311-0810-G038	8	10	19	16	9	30,5	G3/8"
PA1311-0810-G012	8	10	24	16	10	32	G1/2"
PA1311-1012-G038	10	10	19	18	9	32	G3/8"
PA1311-1012-G012	10	10	24	18	10	33,5	G1/2"
PA1311-1215-G012	10	15	24	22	10	35,5	G1/2"

PA1302

RACCORDO FILETTO MASCHIO BSPP CON O-RING
MALE CONNECTOR BSPP THREAD WITH O-RING

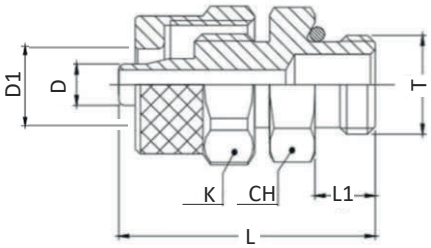

Codice - Code	ØD	ØD1	CH	K	K1	L1	L	L2	T
PA1302-0406-G018	4	6	13	12	-	6	25,5	-	G1/8"
PA1302-0406-G014	4	6	16	12	-	8	28	-	G1/4"
PA1302-0406-G038	4	6	19	12	-	9	29	-	G3/8"
PA1302-0608-G018	6	8	14	14	-	6	25,5	-	G1/8"
PA1302-0608-G014	6	8	16	14	-	8	28	-	G1/4"
PA1302-0608-G038	6	8	19	14	-	9	29	-	G3/8"
PA1302-0810-G018	8	10	14	16	-	6	27,5	-	G1/8"
PA1302-0810-G014	8	10	16	16	-	8	29,5	-	G1/4"
PA1302-0810-G038	8	10	19	16	-	9	30,5	-	G3/8"
PA1302-0810-G012	8	10	24	16	-	10	32	-	G1/2"
PA1302-1012-G038	10	10	19	18	-	9	32	-	G3/8"
PA1302-1012-G012	10	10	24	18	-	10	33,5	-	G1/2"
PA1302-1215-G012	10	15	24	22	-	10	35,5	-	G1/2"

PA1306

RACCORDO A "T" GIREVOLE FILETTO MASCHIO BSPP
SWIVEL MALE TEE BSPP THREAD

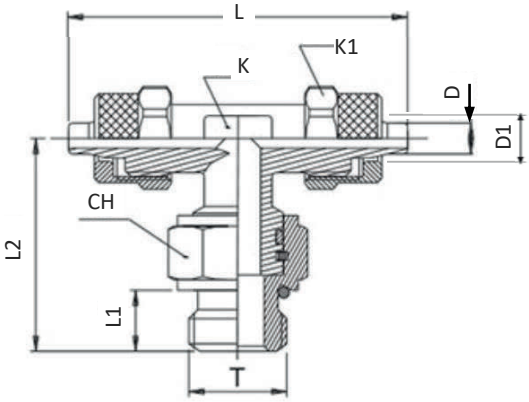

Codice - Code	ØD	ØD1	CH	K	K1	L1	L	L2	T
PA1306-0305-G018	4	6	8	12	13	6	45	25,7	G1/8"
PA1306-0406-G018	6	8	10	14	13	6	45,5	26	G1/8"
PA1306-0406-G014	4	6	10	12	17	8	45,5	29	G1/4"
PA1306-0608-G014	6	8	10	14	17	8	45,5	28	G1/4"
PA1306-0810-G014	8	10	11	16	17	8	51	29	G1/4"

PA1303

RACCORDO FILETTO MASCHIO BSPT 90°
MALE CONNECTOR BSPT 90°

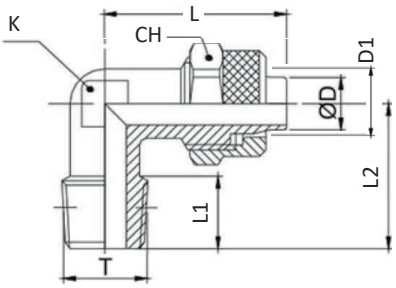

Codice - Code	CH	ØD	ØD1	K	K1	L	L1	L2	T
PA1303-0406-R018	12	4	6	8	-	22,5	8	17	R1/8"
PA1303-0406-R014	12	4	6	10	-	22,5	11	20	R1/4"
PA1303-0406-R038	12	4	6	11	-	23,5	11,5	22,5	R3/8"
PA1303-0608-R018	14	6	8	10	-	22,5	8	17	R1/8"
PA1303-0608-R014	14	6	8	10	-	22,5	11	20	R1/4"
PA1303-0608-R038	14	6	8	11	-	24	11,5	22,5	R3/8"
PA1303-0608-R012	14	6	8	17	-	28	14	26,5	R1/2"
PA1303-0810-R018	16	8	10	11	-	25,5	8	18,5	R1/8"
PA1303-0810-R014	16	8	10	11	-	25,5	11	21,5	R1/4"
PA1303-0810-R038	16	8	10	11	-	25,5	11,5	22,5	R3/8"
PA1303-0810-R012	16	8	10	17	-	28	14	28	R1/2"
PA1303-1012-R014	18	10	12	14	-	30	11	24	R1/4"
PA1303-1012-R038	18	10	12	14	-	30	11,5	24,5	R3/8"
PA1303-1012-R012	18	10	12	17	-	30,5	14	28	R1/2"
PA1303-1215-R012	22	13	15	17	-	34	14	28	R1/2"

PA1304

RACCORDO FILETTO MASCHIO BSPP 90° CON O-RING
MALE CONNECTOR BSPP THREAD 90° WITH O-RING

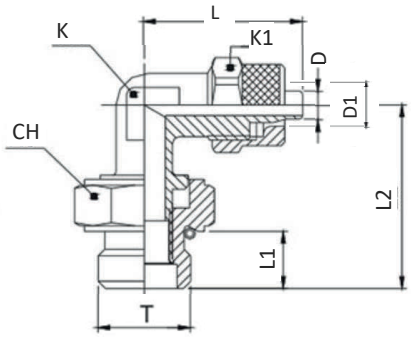

Codice - Code	CH	ØD	ØD1	K	K1	L	L1	L2	T
PA1304-0406-G018	14	6	8	10	14	23,5	6	22,5	G1/8"
PA1304-0406-G014	17	4	6	10	12	23,5	8	25	G1/4"
PA1304-0608-G014	17	6	8	10	14	23,5	8	25	G1/4"
PA1304-0810-G014	17	8	10	11	16	23,5	8	25,5	G1/4"

PA1307

NIPPLO DI GIUNZIONE IN LINEA
UNION CONNECTOR METRIC TUBE

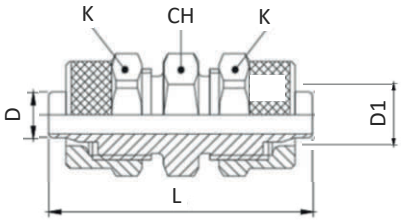

Codice - Code	CH	ØD	ØD1	K	L	L1
PA1307-0406	12	4	6	12	34,5	-
PA1307-0608	14	6	8	14	35	-
PA1307-0810	14	8	10	16	38	-
PA1307-1012	17	10	12	18	41	-
PA1307-1215	22	12,5	15	22	45,5	-

PA1308

NIPPLO DI GIUNZIONE A GOMITO
UNION ELBOW METRIC TUBE

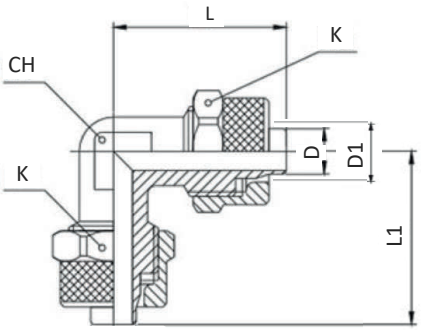

Codice - Code	CH	ØD	ØD1	K	L	L1
PA1308-0406	8	4	6	12	21,5	21,5
PA1308-0608	10	6	8	14	22,5	22,5
PA1308-0810	11	8	10	16	25,5	25,5
PA1308-1012	14	10	12	18	30	30
PA1308-1215	17	12,5	15	22	34	34

PA1309

NIPPLO DI GIUNZIONE A "T"
UNION TEE METRIC TUBE

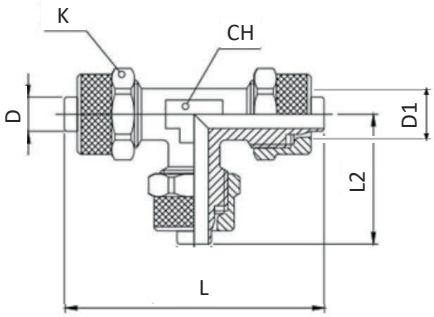

Codice - Code	CH	ØD	ØD1	K	L	L1
PA1309-0406	8	4	6	12	45	22,5
PA1309-0608	10	6	8	14	45	22,5
PA1309-0810	11	8	10	16	51	25,5
PA1309-1012	14	10	12	18	60	30
PA1309-1215	17	13	15	22	68	34

PA1315

RACCORDO AD OCCHIELLO SINGOLO
SINGLE BANJO CONNECTOR

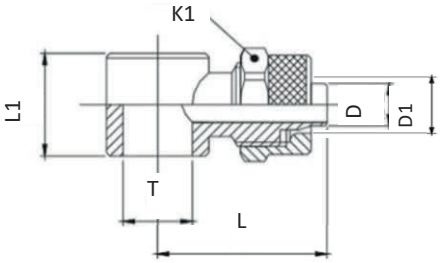

Codice - Code	CH	ØD	ØD1	L	L1	T
PA1315-0406-M005	9	4	6	9	18	M5
PA1315-0406-G018	12	4	6	14,5	24	G1/8"
PA1315-0406-G014	12	4	6	14,5	26	G1/4"
PA1315-0608-G018	14	6	8	14,5	24	G1/8"
PA1315-0608-G014	14	6	8	14,5	26	G1/4"
PA1315-0810-G018	16	8	10	14,5	28	G1/8"
PA1315-0810-G014	16	8	10	14,5	28	G1/4"

PA1316

ASTA SINGOLA PER RACCORDO AD OCCHIELLO FIL. MASCHIO BSPP
STEM FOR SINGLE BANJO CONNECTOR

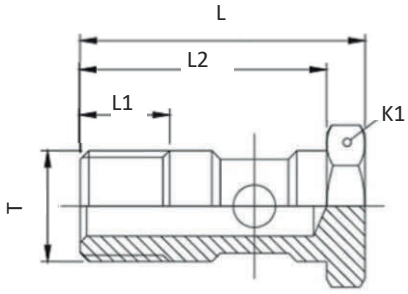

Codice - Code	CH	ØD	L	L1	L2	T
PA1316-M005	8	14	18	6	15	M5
PA1316-M006	8	22	18	6	15	M6
PA1316-G018	14	17	27	8	23	G1/8"
PA1316-G014	17	26	30	11	25	G1/4"

PA1314

GHIERA PRESSA-TUBO
NICKEL PLATED LOCKING NUT

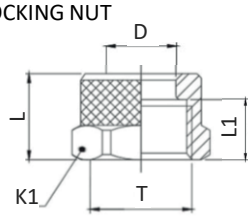

Codice - Code	ØD	K1	L	L1	T
PA1314-0406-M008	6	9	9	6,5	M8x0,75
PA1314-0406-M010	6	12	10,5	7,5	M10x1
PA1314-0608-M012	8	14	10,5	7,5	M12x1
PA1314-0810-M014	10	16	11,5	8	M14x1
PA1314-1012-M016	12	18	13	10	M16x1
PA1314-1215-M020	15	22	15,5	11	M20x1

PA1317

RONDELLA BONDED
BONDED WASHER

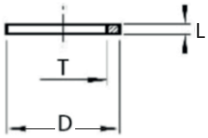

Codice - Code	ØD	K1	L	L1	T
PA1317-14-018	14	-	1	-	1/8"
PA1317-17-014	17	-	1	-	1/4"
PA1317-22-038	22	-	1,3	-	3/8"
PA1317-26-012	26	-	1,6	-	1/2"

PA1318

RONDELLA IN NYLON
NYLON WASHER

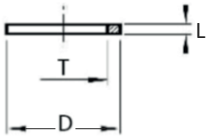

Codice - Code	ØD	K1	L	L1	T
PA1318-08-M005	8,5	-	1,5	-	5
PA1318-14-G018	14	-	1,5	-	9,8
PA1318-18-G014	18	-	1,5	-	13,2
PA1318-21-G038	21	-	1,5	-	16,7
PA1318-26-G012	26	-	2	-	21,1

PA1319

RONDELLA IN ALLUMINIO
ALUMINIUM WASHER

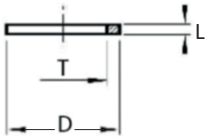

Codice - Code	ØD	K1	L	L1	T
PA1319-14-G018	14	-	1,5	-	10
PA1319-17-G014	17	-	1,5	-	13,3
PA1319-21-G038	21	-	1,5	-	16,9
PA1319-26-G012	26	-	1,5	-	21,1

PA1320

RONDELLA IN PVC
PVC WASHER

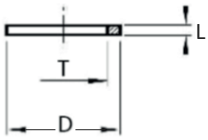

Codice - Code	ØD	K1	L	L1	T
PA1320-14-G018	14	-	1,5	-	10
PA1320-17-G014	18	-	1,5	-	13,5
PA1320-21-G038	21	-	1,5	-	16,7
PA1320-26-G012	26	-	1,5	-	21,3

PC2201 PC2242 PH1105 PC2301 96
PC2203 PH1103 97
PC2204 PH1104 98
PC2304 PC2216 PC2251 99
PC2206 PC2250 PC2272 100
PC2290 PC2290-CH PC2290-TX 101

NOTE TECNICHE:
FILETTI CILINDRICI BSPP SECONDO STD. ISO 228, CONICI BSPT STD. ISO 7. IL COLORE ED IL DISEGNO DEI PRODOTTI FORNITI POTREBBE DIFFERIRE LEGGERMENTE RISPETTO ALLE FOTO VISIBILI SUL CATALOGO, FATTO SALVO IL RISPETTO DELLE CARATTERISTICHE TECNICHE E FUNZIONALI DEI PRODOTTI.

TECHNICAL NOTICES:
BSPP PARALLEL THREADS ACCORDING TO STD. ISO 228; CONICAL THREADS BSPT STD. ISO 7. THE COLOUR AND THE DESIGN OF THE PRODUCTS COULD BE SLIGHTLY DIFFERENT FROM THE PICTURES OF THE CATALOGUE. TECHNICAL AND FUNCTIONAL FEATURES WILL BE RESPECTED.

Promec FITTINGS

PC2201

TAPPO DIN 906 IN OTTONE NICHELATO* CON FILETTO CONICO BSPT
DIN 906 NICKEL PLATED* BRASS PLUG WITH BSPT CONICAL THREAD

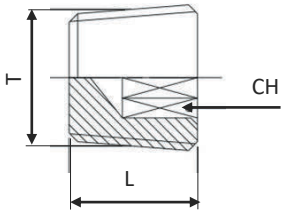

	Codice-Code	CH	L	ØT	max bar	
*	PC2201-M006	3	6	M6	18	25
*	PC2201-M008	4	8	M8x0,75		25
*	PC2201-M010	5	8	M10x1		25
*	PC2201-M012	6	10	M12x1,5		15
*	PC2201-M014	7	10	M14x1,5		10
	PC2201-R018	5	8	R1/8"		25
	PC2201-R014	6	10	R1/4"		25
	PC2201-R038	8	10,5	R3/8"		25
	PC2201-R012	10	13	R1/2"		20
	PC2201-R034	14	15,5	R3/4"		15
	PC2201-R100	17	17,5	R1"		10
*	PC2201-R114	14	22	R1"-1/4		10
*	PC2201-R112	17	22	R1"-1/2		10

PC2242

TAPPO IN OTTONE NICHELATO* SENZA TESTA CON FILETTO CILINDRICO BSPP
NICKEL PLATED* BRASS PLUG WITH PARALLEL BSPP THREAD

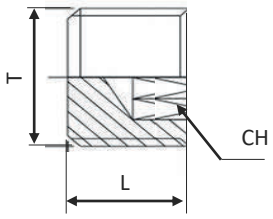

	Codice-Code	CH	L	ØT	max bar	
	PC2242-M008	4	8	M8x0,75	18	25
	PC2242-M010	5	8	M10x1		25
	PC2242-M012	6	8	M12x1,5		15
	PC2242-M014	7	10	M14x1,5		10
*	PC2242-M020	10	10	M20x1,5		10
*	PC2242-M022	12	14	M22x1,5		10
	PC2242-G018	5	8	G1/8"		25
	PC2242-G014	7	10	G1/4"		25
	PC2242-G038	8	10	G3/8"		25
	PC2242-G012	10	10	G1/2"		20

PH1105

TAPPO DIN 906 IN ACCIAIO FOSFATATO CON FILETTO CONICO BSPT
DIN 906 STEEL PLUG WITH BSPT CONICAL THREAD

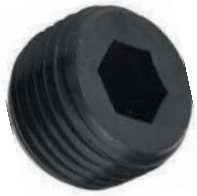

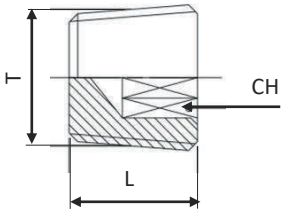

Codice-Code	CH	L	ØT	max Bar	
PH1105-M008	4	8	M8x1	350	10
PH1105-M010	5	8	M10x1	350	10
PH1105-M012	6	10	M12x1,5	350	10
PH1105-M014	7	10	M14x1,5	350	10
PH1105-M016	8	10	M16x1,5	350	10
PH1105-M018	8	10	M18x1,5	250	10
PH1105-M020	10	10	M20x1,5	250	10
PH1105-M022	10	10	M22x1,5	225	10
PH1105-M024	12	12	M24x1,5	225	10
PH1105-M026	12	12	M26x1,5	225	10
PH1105-M030	17	17	M30x1,5	200	10
PH1105-R018	5	8	R1/8"	350	10
PH1105-R014	7	10	R1/4"	350	10
PH1105-R038	8	10	R3/8"	250	10
PH1105-R012	10	10	R1/2"	225	10
PH1105-R034	12	12	R3/4"	200	5
PH1105-R100	17	12	R1"	160	5
PH1105-R114	22	18	R1" 1/4	160	5
PH1105-R112	24	20	R1" 1/2	160	5

PC2301

TAPPO DIN 906 IN AISI 304 CON FILETTO CONICO BSPT
DIN 906 STAINLESS STEEL PLUG WITH BSPT CONICAL THREAD

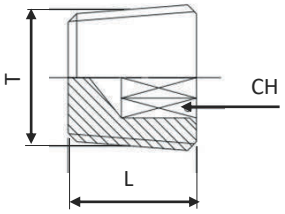

Codice-Code	CH	L	T	max Bar	
PC2301-R018	5	8,2	R1/8"	150	10
PC2301-R014	6	10,2	R1/4"	150	10
PC2301-R038	8	11,6	R3/8"	150	10
PC2301-R012	10	13,3	R1/2"	150	10
PC2301-R034	12	15	R3/4"	150	10
PC2301-R100	17	19	R1"	120	5
PC2301-R114	22	22	R1"1/4	120	5
PC2301-R112	24	22	R1"1/2	120	5

PC2203

TAPPO DIN 908 IN OTTONE NICHELATO* FILETTO BSPP
DIN 908 NICKEL PLATED* BRASS PLUG WITH BSPP PARALLE THREAD

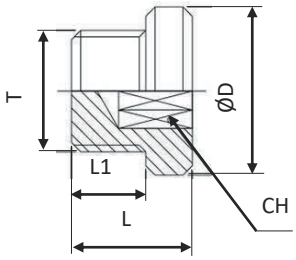

	Codice-Code	CH	ØD	L	L1	ØT	max bar	
*	PC2203-M010	5	14	11	8	M10x1	18	25
*	PC2203-M012	6	17	15	12	M12x1,5		25
*	PC2203-M014	6	19	15	12	M14x1,5		25
*	PC2203-M020	10	25	16	13	M20x1,5		25
	PC2203-G018	5	15	10	6	G1/8"		25
	PC2203-G014	6	18	12	8	G1/4"		25
	PC2203-G038	8	21	13	9	G3/8"		20
	PC2203-G012	10	25	14,5	10	G1/2"		15
*	PC2203-G034	12	32	20	15	G3/4"		10
*	PC2203-G100	17	39	21	16	G1"		10

*: Ottone giallo – Yellow Brass

PH1103

TAPPO DIN 908 IN ACCIAIO ZINCATO FILETTO CILINDRICO BSPP
DIN 908 GALVANIZED STEEL PLUG WITH BSPP PARALLEL THREAD

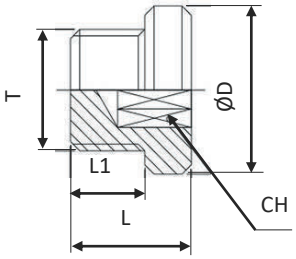

Codice-Code	CH	ØD	L	L1	ØT	max Bar	
PH1103-M008	4	12	11	8	M8x1	400	25
PH1103-M010	5	14	11	8	M10x1	400	25
PH1103-M012	6	17	15	12	M12x1,5	400	25
PH1103-M014	6	19	15	12	M14x1,5	400	10
PH1103-M016	8	21	15	12	M16x1,5	400	10
PH1103-M018	8	23	16	12	M18x1,5	400	10
PH1103-M020	10	25	18	14	M20x1,5	400	10
PH1103-M022	10	27	18	14	M22x1,5	400	10
PH1103-M024	12	29	18	14	M24x1,5	300	5
PH1103-M026	12	31	20	16	M26x1,5	250	5
PH1103-M027	12	32	20	16	M27x2	250	5
PH1103-M030	17	36	20	16	M30x1,5	250	5
PH1103-M033	17	39	21	16	M33x2	250	5
PH1103-M048	22	49	22	16	M48x2	250	5
PH1103-G018	5	14	11	8	G1/8"	400	25
PH1103-G014	6	18	15	12	G1/4"	400	25
PH1103-G038	8	22	15	12	G3/8"	400	10
PH1103-G012	10	26	18	14	G1/2"	400	10
PH1103-G034	12	32	20	16	G3/4"	400	5
PH1103-G100	17	39	21	16	G1"	400	5
PH1103-G114	22	49	21	16	G3/4"	250	5
PH1103-G112	24	55	21	16	G1"	250	5

PH1199

PH1198

VEDI PAG. 123
SEE PAGE 123

Promec FITTINGS

PC2204

TAPPO IN OTTONE NICHELATO* FILETTO CILINDRICO BSPP ED O-RING
NICKEL PLATED* BRASS WITH BSPP PARALLEL THREAD PLUG AND O-RING

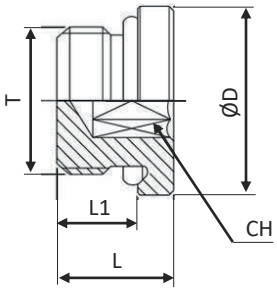

		Codice-Code	CH	ØD	L	L1	ØT	max bar	
	OR NBR	PC2204-M005-N	2,5	8	7,2	4,5	M5		25
	OR FKM	PC2204-M005-V	2,5	8	7,2	4,5	M5		25
	OR NBR	PC2204-G018-N	5	14	9,5	6,5	G1/8"		25
	OR FKM	PC2204-G018-V	5	14	9,5	6,5	G1/8"		25
	OR NBR	PC2204-G014-N	6	17	11,5	8	G1/4"		25
	OR FKM	PC2204-G014-V	6	17	11,5	89	G1/4"		25
	OR NBR	PC2204-G038-N	8	20	12,5	28	G3/8"	18	20
	OR FKM	PC2204-G038-V	8	20	12,5	9	G3/8"		20
	OR NBR	PC2204-G012-N	10	26	14	9	G1/2"		15
	OR FKM	PC2204-G012-V	10	26	14	10	G1/2"		15
*	OR NBR	PC2204-G034-N	12	32	20	15	G3/4"		10
*	OR NBR	PC2204-G100-N	17	39	21	16	G1"		5
*	OR NBR	PC2204-G114-N	22	47	24	18	G1"		5

PH1104

TAPPO DIN 908 IN ACCIAIO ZINCATO FILETTO CILINDRICO BSPP ED O-RING
DIN 908 GALVANIZED STEEL BSPP PARALLEL THREAD PLUG AND O-RING

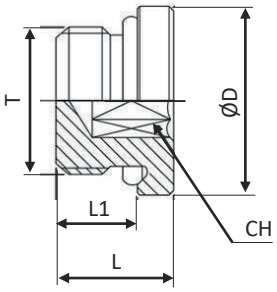

	Codice-Code	CH	ØD	L	L1	ØT	max Bar	
OR NBR	PH1104-M010-N	5	14	12	8	M10x1	400	10
OR FKM	PH1104-M010-V	5	14	12	8	M10x1	400	10
OR NBR	PH1104-M012-N	6	17	17	12	M12x1,5	400	10
OR FKM	PH1104-M012-V	6	17	17	12	M12x1,5	400	10
OR NBR	PH1104-M014-N	6	19	17	12	M14x1,5	400	10
OR FKM	PH1104-M014-V	6	19	17	12	M14x1,5	400	10
OR NBR	PH1104-M016-N	8	22	17	12	M16x1,5	400	10
OR FKM	PH1104-M016-V	8	22	17	12	M16x1,5	400	10
OR NBR	PH1104-M018-N	8	24	17	12	M18x1,5	400	10
OR FKM	PH1104-M018-V	8	24	17	12	M18x1,5	400	10
OR NBR	PH1104-M020-N	10	26	19	14	M20x1,5	400	10
OR FKM	PH1104-M020-V	10	26	19	14	M20x1,5	400	10
OR NBR	PH1104-M022-N	10	27	19	14	M22x1,5	400	10
OR FKM	PH1104-M022-V	10	27	19	14	M22x1,5	400	10
OR NBR	PH1104-M027-N	12	32	21	16	M27x2	400	5
OR FKM	PH1104-M027-V	12	32	21	16	M27x2	400	5
OR NBR	PH1104-G018-N	5	14	12	8	G1/8"	400	10
OR FKM	PH1104-G018-V	5	14	12	8	G1/8"	400	5
OR NBR	PH1104-G014-N	6	19	17	12	G1/4"	400	10
OR FKM	PH1104-G014-V	6	19	17	12	G1/4"	400	5
OR NBR	PH1104-G038-N	8	22	17	12	G3/8"	400	10
OR FKM	PH1104-G038-V	8	22	17	12	G3/8"	400	5
OR NBR	PH1104-G012-N	10	27	19	14	G1/2"	400	10
OR FKM	PH1104-G012-V	10	27	19	14	G1/2"	400	5
OR NBR	PH1104-G034-N	12	32	21	16	G3/4"	400	5
OR FKM	PH1104-G034-V	12	32	21	16	G3/4"	400	5
OR NBR	PH1104-G100-N	17	40	22,5	16	G1"	400	5
OR FKM	PH1104-G100-V	17	40	22,5	16	G1"	400	5
OR NBR	PH1104-G114-N	22	50	22,5	16	G1"1/4	250	5
OR FKM	PH1104-G114-V	22	50	22,5	16	G1"1/4	250	5
OR NBR	PH1104-G112-N	24	55	22,5	16	G1"1/2	250	5
OR FKM	PH1104-G112-V	24	55	22,5	16	G1"1/2	250	5

PC2304

TAPPO IN AISI 304 FILETTO CILINDRICO BSPP ED O-RING FKM 180°C
STAINLESS STEEL PLUG WITH BSPP PARALLEL THREAD AND FKM OR 180°C

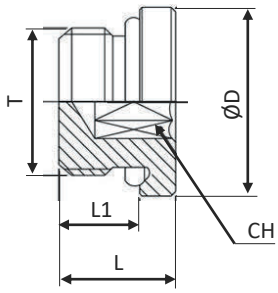

Codice-Code	CH	ØD	L	L1	T	max Bar	
PC2304-G018-V	5	14	12	8	G1/8"	400	10
PC2304-G014-V	6	19	17	12	G1/4"	400	10
PC2304-G038-V	8	22	17	12	G3/8"	400	10
PC2304-G012-V	10	27	19	14	G1/2"	400	10
PC2304-G034-V	12	32	21	16	G3/4"	400	10
PC2304-G100-V	17	40	22,5	16	G1"	400	10
PC2304-G114-V	12	50	22,5	16	G1"1/4	250	10
PC2304-G112-V	17	55	22,5	16	G1"1/2	250	10

PC2216

TAPPO IN OTTONE CON FILETTO FEMMINA BSPP
BSPP FEMALE THREAD BRASS PLUG

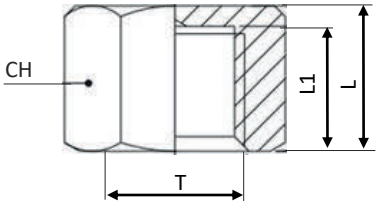

Codice-Code	CH	ØD	L	L1	ØT	max Bar	
PC2216-M005	8	-	7	5,5	M5	25	10
PC2216-G018	14	-	11	9	G1/8"	25	10
PC2216-G014	17	-	13	11	G1/4"	25	10
PC2216-G038	21	-	13,5	11	G3/8"	25	10
PC2216-G012	24	-	13,5	11	G1/2"	20	10
PC2216-G034	30	-	15	12,5	G3/4"	20	5
PC2216-G100	38	-	15	12,5	G1"	15	5

PC2251

TAPPO CHIUSURA A SFERA
BALL SEALING PLUG

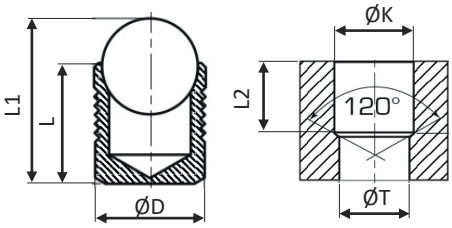

Codice-Code	ØD	ØK +0.10/-0	L	L1	L2	ØT max	
PC2251-03	3	3	3,6	4,6	3,4	2,2	100
PC2251-04	4	4	4	5,2	3,8	3,3	100
PC2251-05	5	5	5,5	7,1	5,3	4,3	100
PC2251-06	6	6	6,5	8,6	6,3	5,3	100
PC2251-07	7	7	7,5	10,1	7,3	6,4	100
PC2251-08	8	8	8,5	11,6	8,3	7,4	100
PC2251-09	9	9	10	13,6	9,8	8,4	50
PC2251-10	10	10	11	15,1	10,8	9,4	50
PC2251-12	12	12	13	17,9	12,8	10,6	50
PC2251-14	14	14	15	20,6	14,5	12,7	50
PC2251-16	16	16	17	23,4	16,5	14,7	25
PC2251-18	18	18	19	26,4	18,5	16,7	25
PC2251-20	20	20	22	30,1	21,45	18,7	25
PC2251-22	22	22	25	34	24,5	20,7	25

Promec FITTINGS

PC2206

TAPPO IN OTTONE-ACCIAIO INOX A PRESSIONE SENZA FILETTO
THREADLESS BRASS-STAINLESS STEEL PRESSURE PLUG

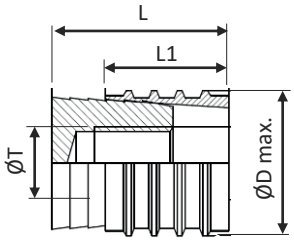

Codice-Code	ØD max	L	L1	ØT	
PC2206-06	6	11.5	8	M3	20
PC2206-08	8	11.5	8	M4	20
PC2206-10	10	14	10	M6	20
PC2206-12	12	14	10	M6	15
PC2206-15	15	16	12	M8	10
PC2206-16	16	16	12	M8	10
PC2206-20	20	16	12	M8	10

PC2250

TAPPO IN OTTONE AD ESPANSIONE CON O-RING FKM
THREADLESS PRESSURE BRASS PLUG WITH FKM O-RING

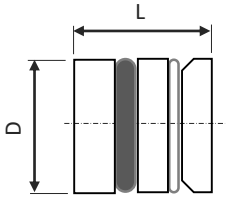

Codice-Code	ØD	L	L1	ØT	
PC2250-060	6	10	-	-	10
PC2250-070	7	10	-	-	10
PC2250-080	8	10	-	-	10
PC2250-085	8,5	10	-	-	10
PC2250-100	10	10	-	-	10
PC2250-115	11,5	10	-	-	10
PC2250-120	12	10	-	-	10

PC2272

TAPPO IN OTTONE AD ESPANSIONE CON O-RING FKM CHIAVE ESAGONALE
THREADLESS PRESSURE BRASS PLUG WITH FKM O-RING INNER HEXAGON

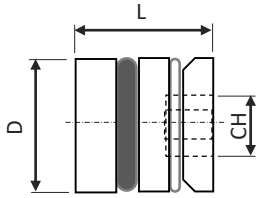

Codice-Code	ØD	L	L1	ØT	
PC2272-140	14	12	-	-	10
PC2272-150	15	12	-	-	10
PC2272-160	16	12	-	-	10
PC2272-200	20	12	-	-	10
PC2272-220	22	12	-	-	10

PC2290

TAPPO AD ESPANSIONE IN OTTONE ZINCATO CON ANELLO DI TENUTA MECCANICA E O-RING FKM
GALVANIZED BRASS THTREADLESS PLUG WITH LOCKING RING AND FKM O-RING

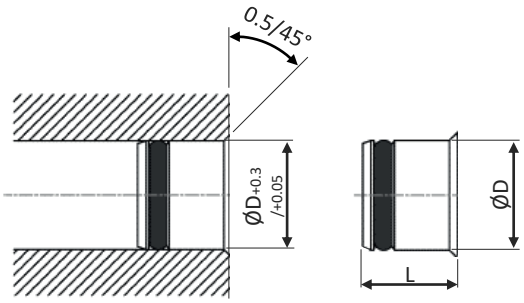

Codice-Code	ØD	L	TORX	max bar	
PC2290-06-B	6	≤7	T6	25	25
PC2290-08-B	8	≤9,5	T10		25
PC2290-10-B	10	≤10	T10		25
PC2290-11-B	11	≤11	T10		20
PC2290-12-B	12	≤11	T10		15
PC2290-14-B	14	≤12,5	T27		10
PC2290-15-B	15	≤12,5	T27		10
PC2290-16-B	16	≤12,5	T27		10
PC2290-20-B	20	≤13,5	T27		5
PC2290-25-B	25	≤13,5	T27		5

PC2290

TAPPO AD ESPANSIONE IN AISI 304 CON ANELLO DI TENUTA MECCANICA E O-RING FKM
AISI 304 THTREADLESS PLUG WITH LOCKING RING AND FKM O-RING

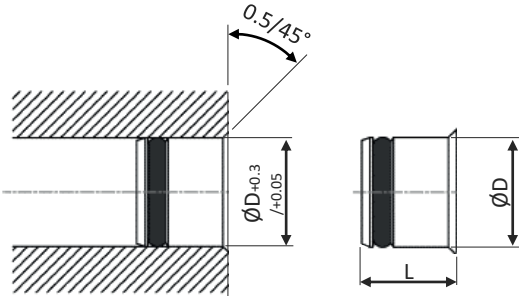

Codice-Code	ØD	L	TORX	max bar	
PC2290-06-S	6	≤7	T6	25	25
PC2290-08-S	8	≤9,5	T10		25
PC2290-10-S	10	≤10	T10		25
PC2290-11-S	11	≤11	T10		20
PC2290-12-S	12	≤11	T10		15
PC2290-14-S	14	≤12,5	T27		10
PC2290-15-S	15	≤12,5	T27		10
PC2290-16-S	16	≤12,5	T27		10
PC2290-20-S	20	≤13,5	T27		5
PC2290-25-S	25	≤13,5	T27		5

PC2290-CH

CHIAVE PER INSTALLAZIONE PC2290
INSTALLATION TOOL FOR PC2290

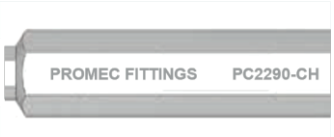

Misura tappo - Plug size	Codice Chiave Tool Code
6	PC2290-06-CH
8	PC2290-08-CH
10, 11, 12	PC2290-10-CH
14	PC2290-14-CH
15, 16	PC2290-15-CH
20	PC2290-20-CH
25	PC2290-25-CH

PC2290-TX

TORX PER PC2290-CH
TORX FOR PC2290-CH

Misura tappo - Plug size	Codice Torx Torx Code
6	PC2290-TX06
8	PC2290-TX10
10, 11, 12	PC2290-TX10
14, 15, 16, 20, 25	PC2290-TX27

104 PC2207 PH1107 PC2307 PC2205 PC2209 PC2309 105

106 PC2208 PC2221 PC2222 PH1122 PC2220 PC2223 107

108 PH1123 PC2225 PC2224 PC2218 PH1118 PC2318 109

110 PC2213 PC2214 PH1114 PC2313 PC2253 PC2363 111

112 PC2210 PH1110 PC2310 PH1137 PH1167 PH1143 113

114 PH1147 PH1142 PC2211 PC2311 PC2212 115

116 PC2312 PH1116 PH1145 PH1148 PH1141 PH1115 117

118 PH1138 PH1139 PH1140 PH1144 PH1124 PH1117 119

120 PC2217 PH1128 PC2246 PC2249 PH1150 PC2271 121

122 PC2238 PC2239 PC2255 PC2256 PH1199 PH1198 123

PC2215

Promec FITTINGS

PC2207

NIPPLO OTTONE MASCHIO-MASCHIO BSPP CONO 60°
BRASS MALE-MALE FITTING BSPP WITH 60° CONE

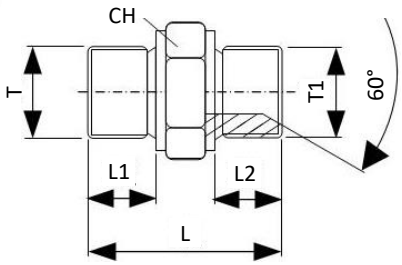

Codice-Code	CH	F	L	L1	ØT	ØT1	max bar	
PC2207-G018	17	5	21	-	G1/8"	G1/8"		25
PC2207-G018-G014	17	5	23	-	G1/8"	G1/4"		25
PC2207-G018-G038	19	5	25	-	G1/8"	G3/8"		25
PC2207-G014	17	7	23	9	G1/4"	G1/4"		25
PC2207-G014-G038	19	7	23	-	G1/4"	G3/8"		25
PC2207-G014-G012	24	7	29	-	G1/4"	G1/2"		25
PC2207-G038	19	11	23	9	G3/8"	G3/8"		20
PC2207-G038-G012	24	11	29	-	G3/8"	G1/2"	30	20
PC2207-G038-G034	32	11	36	-	G3/8"	G3/4"		20
PC2207-G012	24	14	30	12	G1/2"	G1/2"		15
PC2207-G012-G034	32	14	36	-	G1/2"	G3/4"		5
PC2207-G012-G100	36	14	40	-	G1/2"	G1"		5
PC2207-G034	32	19	40	15	G3/4"	G3/4"		5
PC2207-G034-G100	36	19	40	15	G3/4"	G1"		5
PC2207-G100	36	24	42	15	G1"	G1"		5

PH1107

NIPPLO ACCIAIO ZINCATO MASCHIO\MASCHIO BSPP CONO 60°
GALVANIZED STEEL MALE\MALE FITTING BSPP WITH 60° CONE

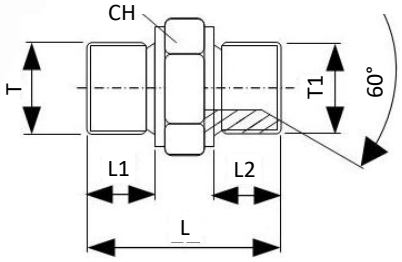

Codice-Code	CH	L	L1	L2	ØT	ØT1	max Bar	
PH1107-M010	14	24	8	8	M10x1	M10x1	400	10
PH1107-M016	22	34	12	12	M16x1,5	M16x1,5	400	10
PH1107-G018	14	24	8	8	G1/8"	G1/8"	400	10
PC1107-G014-M014	19	-	-	-	G1/4"	M14x1.5	400	10
PC1107-G014-M016	22	-	-	-	G1/4"	M16x1.5	400	10
PH1107-G014-G018	19	28,5	11	8	G1/4"	G1/8"	400	10
PH1107-G014	19	32	11	11	G1/4"	G1/4"	400	10
PC1107-G038-M012	22	-	-	-	G3/8"	M12x1.5	400	10
PC1107-G038-M018	24	-	-	-	G3/8"	M18x1.5	400	10
PH1107-G038-G014	22	33,5	12	11	G3/8"	G1/4"	400	10
PH1107-G038	22	35	12	12	G3/8"	G3/8"	400	10
PH1107-G012-G014	27	37	14	11	G1/2"	G1/4"	350	5
PH1107-G012-G038	27	38,5	14	12	G1/2"	G3/8"	350	5
PC1107-G012-M018	27	-	-	-	G1/2"	M18x1.5	350	5
PC1107-G012-M022	27	-	-	-	G1/2"	M22x1.5	350	5
PH1107-G012	27	41	14	14	G1/2"	G1/2"	350	5
PC1107-G034-M026	32	-	-	-	G3/4"	M26x1.5	315	5
PH1107-G034-G038	32	42,5	16	12	G3/4"	G3/8"	315	5
PH1107-G034-G012	32	45	16	14	G3/4"	G1/2"	315	5
PH1107-G034	32	47	16	16	G3/4"	G3/4"	315	1
PH1107-G100-G012	41	49	19	14	G1"	G1/2"	250	1
PH1107-G100-G034	41	51	19	16	G1"	G3/4"	250	1
PH1107-G100	41	54	19	19	G1"	G1"	250	1
PH1107-G114	50	58	20	20	G1"1/4	G1"1/4	200	1
PH1107-G112	55	66	23	23	G1"1/2	G1"1/2	200	1

PC2307

NIPPLO ACCIAIO INOX MASCHIO-MASCHIO BSPP CONO 60°
INOX STEEL MALE-MALE FITTING BSPP WITH 60° CONE

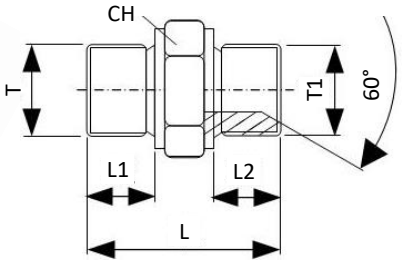

Codice-Code	CH	L	L1	L2	ØT	ØT1	max Bar	
PC2307-G018	19	32	11	11	G1/4"	G1/4"	400	10
PC2307-G014	19	32	11	11	G1/4"	G1/4"	400	10
PC2307-G038	22	35	12	12	G3/8"	G3/8"	400	10
PC2307-G012	27	41	14	14	G1/2"	G1/2"	350	5
PC2307-G034	32	47	16	16	G3/4"	G3/4"	315	1
PC2307-G100	41	54	19	19	G1"	G1"	250	1
PC2307-G114	50	58	20	20	G1"1/4	G1"1/4	250	1
PC2307-G112	55	66	23	23	G1"1/2	G1"1/2	250	1

PC2205

NIPPLO IN OTTONE NICHELATO MASCHIO\MASCHIO BSPP
NIKEL PLATED BRASS MALE\MALE FITTING BSPP

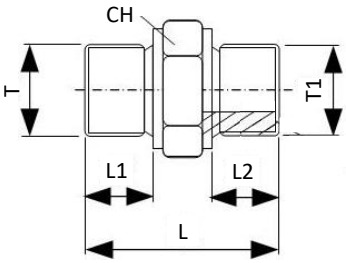

Codice-Code	CH	F	L	L1	L2	ØT	ØT1	max bar	
PC2205-M005	8	2,5	11	4	4	M5	M5	18	25
PC2205-M005-G018	14	2,5	15,5	6,5	5	G1/8"	M5		25
PC2205-G018	14	6	18,5	7	7	G1/8"	G1/8"		25
PC2205-G014-G018	17	5,5	19	8	6,5	G1/4"	G1/8"		25
PC2205-G014	17	8,5	21	8	8	G1/4"	G1/4"		25
PC2205-G038-G018	19	5,5	20,5	9	6,5	G3/8"	G1/8"		25
PC2205-G038-G014	19	8,5	22,5	9	8	G3/8"	G1/4"		20
PC2205-G038	19	11,5	23	9	9	G3/8"	G3/8"		20
PC2205-G012-G014	24	8,5	24,5	10	9	G1/2"	G1/4"		20
PC2205-G012-G038	24	11	24,5	10	9	G1/2"	G3/8"		20
PC2205-G012	24	15	25	10	10	G1/2"	G1/2"		15
PC2205-G034-G038	30	11	26,5	11	10	G3/4"	G3/8"		20
PC2205-G034-G012	30	15	27,5	11	11	G3/4"	G1/2"		15
PC2205-G034	30	20	27,5	11	11	G3/4"	G3/4"		10
PC2205-G100-G034	36	20	30	13	11	G1"	G3/4"		15
PC2205-G100	36	26	32	13	13	G1"	G1"		10

PC2209

NIPPLO IN OTTONE NICHELATO MASCHIO\MASCHIO CON FILETTO CONICO BSPT
NIKEL PLATED MALE\MALE FITTING WITH BSPT CONICAL THREAD

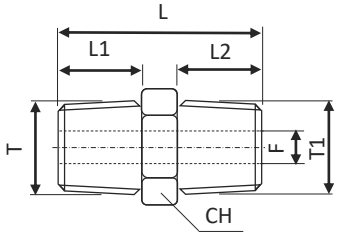

Codice-Code	CH	F	L	L1	L2	ØT	ØT1	max bar	
PC2209-R018	12	6	19	7,5	7,5	R1/8"	R1/8"	18	25
PC2209-R014-R018	14	5,5	23	11	7,5	R1/4"	R1/8"		25
PC2209-R014	14	7,5	26,5	11	11	R1/4"	R1/4"		25
PC2209-R038-R018	17	5,5	23,5	11	7,5	R3/8"	R1/8"		25
PC2209-R038-R014	17	8	26,5	11	10,5	R3/8"	R1/4"		20
PC2209-R038	17	11,5	27	11	11	R3/8"	R3/8"		25
PC2209-R012-R014	22	8	28,5	12,5	10,5	R1/2"	R1/4"		15
PC2209-R012-R038	22	11	28,5	12,5	10,5	R1/2"	R3/8"		15
PC2209-R012	22	15	30,5	12,5	12,5	R1/2"	R1/2"		20
PC2209-R034-R012	27	15	32,5	14	12,5	R3/4"	R1/2"		15
PC2209-R034	27	20	34,5	14	14	R3/4"	R3/4"		15
PC2209-R100-R034	34	20	35,5	15,5	13	R1"	R3/4"		15
PC2209-R100	34	26	37	16,5	16,5	R1"	R1"		15

PC2309

NIPPLO IN ACCIAIO INOX MASCHIO\MASCHIO CON FILETTO CONICO BSPT
STAINLESS STEEL MALE\MALE FITTING WITH BSPT CONICAL THREAD

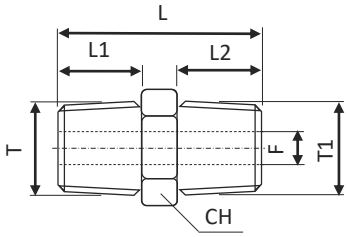

Codice-Code	CH	F	L	L1	L2	ØT	ØT1	max bar	
PC2309-R018	12	6	19	7,5	7,5	R1/8"	R1/8"	150	25
PC2309-R014-R018	14	5,5	25,5	10,5	9	R1/8"	R1/4"		10
PC2309-R014	14	7,5	26,5	11	11	R1/4"	R1/4"		25
PC2309-R038-R014	17	8	29	10,5	11,5	R1/4"	R3/8"		10
PC2309-R038	17	11,5	27	11	11	R3/8"	R3/8"		25
PC2309-R012-R014	22	8	33	10,5	15	R1/4"	R1/2"		10
PC2309-R012-R038	22	11,5	34	11,5	15	R3/8"	R1/2"		10
PC2309-R012	22	15	30,5	12,5	12,5	R1/2"	R1/2"		20
PC2309-R034-R012	27	15	43	15	18	R1/2"	R3/4"		10
PC2309-R034	27	20	34,5	14	14	R3/4"	R3/4"		15
PC2309-R100	34	26	37	16,5	16,5	R1"	R1"		15

PC2208

NIPPLO IN OTTONE NICHELATO MASCHIO\MASCHIO BSPP CON O-RING NBR
NIKEL PLATED BRASS MALE\MALE FITTING BSPP WITH NBR O-RING

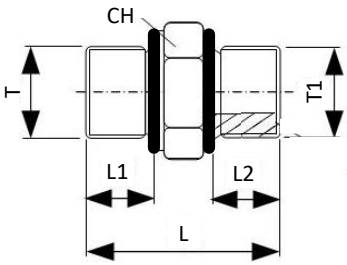

Codice-Code	F	K	L	L1	L2	ØT	ØT1	max bar	
PC2208-G018	6	17,5	14	6,5	6,5	G1/8"	G1/8"	18	25
PC2208-G014-G018	5,5	17	20	8	6,5	G1/4"	G1/8"		25
PC2208-G014	8,5	21	17	8	8	G1/4"	G1/4"		25
PC2208-G038-G018	5,5	20	21	9	6,5	G3/8"	G1/8"		25
PC2208-G038-G014	8,5	20	22	9	8	G3/8"	G1/4"		25
PC2208-G038	11,5	23	20	9	9	G3/8"	G3/8"		25
PC2208-G012-G014	8,5	24	24	10	8	G1/2"	G1/4"		20
PC2208-G012-G038	11	24	25	10	9	G1/2"	G3/8"		15
PC2208-G012	15	26	24	10	10	G1/2"	G1/2"		20

PC2221

MAGGIORAZIONE OTTONE NICHELATO MASCHIO\FEMMINA FILETTO BSPP E O-RING NBR
NIKEL PLATED ENLARGER MALE\FEMALE BSPP THREAD WITH NBR O-RING

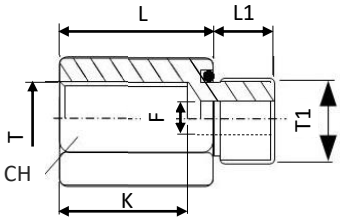

Codice-Code	CH	F	L	L1	L2	ØT	ØT1	max bar	
PC2221-G018-G018	17	5,5	17	8,5	6,5	G1/8"	G1/8"	18	10
PC2221-G014-G018	20	5,5	20	11	6,5	G1/4"	G1/8"		
PC2221-G038-G018	21	5,5	21	12	6,5	G3/8"	G1/8"		
PC2221-G014-G014	21,5	8	22	11	8	G1/4"	G1/4"		
PC2221-G038-G014	22,5	8	23	12	8	G3/8"	G1/4"		
PC2221-G012-G014	26	8	26	14	9	G1/2"	G1/4"		
PC2221-G038-G038	23,5	11	24	12	9	G3/8"	G3/8"		
PC2221-G012-G038	27	11	27	14	9	G1/2"	G3/8"		

PC2222

MAGGIORAZIONE OTTONE NICHELATO MASCHIO\FEMMINA FILETTO BSPP
NIKEL PLATED ENLARGER MALE\FEMALE BSPP THREAD

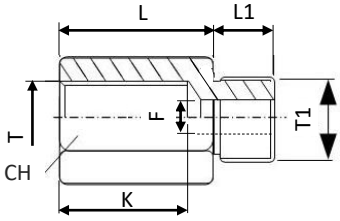

Codice-Code	CH	F	K	L	L1	ØT	ØT1	max bar	
PC2222-M005-M005	8	2,5	5	11	4,5	M5	M5	18	10
PC2222-G018-M005	14	2,2	7	16	5	G1/8"	M5		
PC2222-G018-M006	14	2,7	7	17	6	G1/8"	M6		
PC2222-G018-G018	14	5,5	8	17,5	6,5	G1/8"	G1/8"		
PC2222-G014-G018	17	5,5	11	20	6,5	G1/4"	G1/8"		
PC2222-G038-G018	22	5,5	11	20,5	6,5	G3/8"	G1/8"		
PC2222-G014-G014	17	8,5	11	21,5	8	G1/4"	G1/4"		
PC2222-G038-G014	22	8	13	23	9	G3/8"	G1/4"		
PC2222-G012-G014	27	8	11	26	9	G1/2"	G1/4"		
PC2222-G038-G038	22	11	13	23	9	G3/8"	G3/8"		
PC2222-G012-G038	27	11	13	26	9	G1/2"	G3/8"		
PC2222-G034-G038	32	11	13	26	9	G3/4"	G3/8"		
PC2222-G012-G012	27	15	13	26,5	11	G1/2"	G1/2"		
PC2222-G034-G012	32	15	13	27,5	11	G3/4"	G1/2"		
PC2222-G100-G012	38	15	13	29	11	G1"	G1/2"		
PC2222-G034-G034	32	20	13	27,5	11	G3/4"	G3/4"		
PC2222-G100-G034	38	20	13	29	11	G1"	G3/4"		
PC2222-G100-G100	38	26	13	31	13	G1"	G1"		

PH1122 MAGGIORAZIONE ACCIAIO ZINCATOMASCHIO\FEMMINA FILETTO BSPP
FALVANIZED STEEL ENLARGER MALE\FEMALE BSPP THREAD

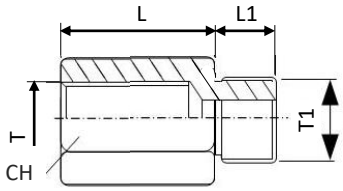

Codice-Code	CH	F	K	L	L1	ØT	ØT1	max Bar	
PH1122-G018-G014	19	-	-	23	8	G1/4"	G1/8"	400	5
PH1122-G018-G038	24	-	-	24	8	G3/8"	G1/8"	400	5
PH1122-G014-G038	24	-	-	24	12	G3/8"	G1/4"	400	5
PH1122-G014-G012	30	-	-	28	12	G1/2"	G1/4"	400	5
PH1122-G038-G012	30	-	-	29	12	G1/2"	G3/8"	400	5
PH1122-G038-G034	36	-	-	32	12	G3/4"	G3/8"	315	1
PH1122-G012-G034	36	-	-	32	14	G3/4"	G1/2"	315	1

PC2220 MAGGIORAZIONE OTTONE NICHELATO MASCHIO\FEMMINA FILETTO CONICO BSPT
NIKEL PLATED ENLARGER MALE\FEMALE BSPT CONICAL THREAD

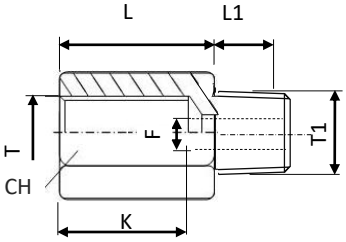

Codice-Code	CH	F	K	L	L1	ØT	ØT1	max bar	
PC2220-G018-R018	14	5,5	8	18,5	11	G1/8"	R1/8"		
PC2220-G014-R018	17	5,5	11	21	14	G1/4"	R1/8"		
PC2220-G014-R014	17	8	11	24	14	G1/4"	R1/4"		
PC2220-G038-R018	22	5,5	11	21,5	14	G3/8"	R1/8"		
PC2220-G038-R014	22	8	11	24,5	14	G3/8"	R1/4"		
PC2220-G012-R014	27	8	13	27,5	17	G1/2"	R1/4"		
PC2220-G038-R038	22	11	11	24,5	14	G3/8"	R3/8"		
PC2220-G012-R038	27	11	13	27,5	17	G1/2"	R3/8"	18	10
PC2220-G034-R038	32	11	13	28	17	G3/4"	R3/8"		
PC2220-G012-R012	27	15	13	28,5	16	G1/2"	R1/2"		
PC2220-G034-R012	32	15	13	29,5	17	G3/4"	R1/2"		
PC2220-G100-R012	38	15	13	31	18	G1"	R1/2"		
PC2220-G034-R034	32	20	13	30	17	G3/4"	R3/4"		
PC2220-G100-R034	38	20	13	31	18	G1"	R3/4"		
PC2220-G100-R100	38	20	13	33,5	18	G1"	R1"		

PC2223 RIDUZIONE OTTONE NICHELATO MASCHIO\FEMMINA FILETTO BSPP
NIKEL PLATED REDUCER MALE\FEMALE BSPP THREAD

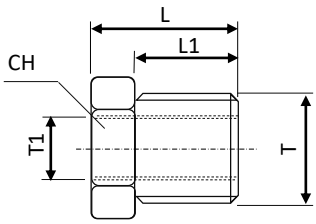

Codice-Code	CH	F	L	L1	L2	ØT	ØT1	max bar	
PC2223-G018-M005	14	-	11	6,5	-	G1/8"	M5		
PC2223-G014-G018	17	-	13	8	-	G1/4"	G1/8"		
PC2223-G038-G018	19	-	14	9	-	G3/8"	G1/8"		
PC2223-G038-G014	19	-	14	9	-	G3/8"	G1/4"		
PC2223-G012-G018	24	-	15	10	-	G1/2"	G1/8"		
PC2223-G012-G014	24	-	15	10	-	G1/2"	G1/4"		
PC2223-G012-G038	24	-	15	10	-	G1/2"	G3/8"	18	10
PC2223-G034-G014	30	-	17	11	-	G3/4"	G1/4"		
PC2223-G034-G038	30	-	17	11	-	G3/4"	G3/8"		
PC2223-G034-G012	30	-	17	11	-	G3/4"	G1/2"		
PC2223-G100-G038	36	-	20	14	-	G1"	G3/8"		
PC2223-G100-G012	36	-	19	13	-	G1"	G1/2"		
PC2223-G100-G034	36	-	19	13	-	G1"	G3/4"		

PH1123

RIDUZIONE ACCIAIO ZINCATOMASCHIO\FEMMINA FILETTO BSPP
FALVANIZED STEEL REDUCER MALE\FEMALE BSPP THREAD

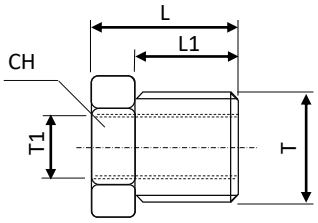

Codice-Code	CH	F	L	L1	L2	ØT	ØT1	max Bar	
PH1123-G014-G018	19	-	18.3	11.5	-	G1/4"	G1/8"	200	5
PH1123-G038-G018	22	-	21	12.5	-	G3/8"	G1/8"	200	
PH1123-G038-G014	22	-	21	12.5	-	G3/8"	G1/4"	200	
PH1123-G012-G018	27	-	23	13.5	-	G1/2"	G1/8"	200	
PH1123-G012-G014	27	-	23	13.5	-	G1/2"	G1/4"	200	
PH1123-G012-G038	27	-	23	13.5	-	G1/2"	G3/8"	200	
PH1123-G034-G014	32	-	26	16	-	G3/4"	G1/4"	160	1
PH1123-G034-G038	32	-	26	16	-	G3/4"	G3/8"	160	
PH1123-G034-G012	32	-	26	16	-	G3/4"	G1/2"	160	
PH1123-G100-G038	38	-	31.5	20	-	G1"	G3/8"	140	
PH1123-G100-G012	38	-	31.5	20	-	G1"	G1/2"	140	
PH1123-G100-G034	38	-	31.5	20	-	G1"	G3/4"	140	
PH1123-G114-G100		-	32.5	20.5	-	G1"1/4	G1"	120	
PH1123-G112-G100		-	34	21.5	-	G1"1/2	G1"	120	
PH1123-G112-G114		-	34	21.5	-	G1"1/2	G1"1/4	120	

PC2225

RIDUZIONE OTTONE NICHELATO MASCHIO CONICO BSPT \ FEMMINA FILETTO BSPP
NIKEL PLATED REDUCER CONICAL BSPT MALE THREAD \ FEMALE BSPP THREAD

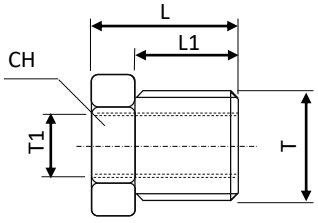

Codice-Code	CH	F	L	L1	L2	ØT	ØT1	max bar	
PC2225-R014-G018	14	6	16	6,5	9	R1/4"	G1/8"	18	10
PC2225-R038-G018	17	6,5	16	8	9	R3/8"	G1/8"		
PC2225-R038-G014	17	8,5	16	9	11	R3/8"	G1/4"		
PC2225-R012-G018	22	6	18	9	10	R1/2"	G1/8"		
PC2225-R012-G014	22	8,5	18	10	12	R1/2"	G1/4"		
PC2225-R012-G038	22	12	18	10	12	R1/2"	G3/8"		
PC2225-R034-G014	27	8,5	20	10	12	R3/4"	G1/4"		
PC2225-R034-G038	27	12	20	11	12	R3/4"	G3/8"		
PC2225-R034-G012	27	15	20	11	14	R3/4"	G1/2"		
PC2225-R100-G038	34	15	22	11	13	R1"	G3/8"		
PC2225-R100-G012	34	15	22	14	14	R1"	G1/2"		
PC2225-R100-G034	34	20	22	13	14	R1"	G3/4"		

PC2224

RIDUZIONE OTTONE NICHELATO MASCHIO\FEMMINA FILETTO BSPP CON O-RING NBR
NIKEL PLATED REDUCER MALE\FEMALE BSPP THREAD WITH NBR O-RING

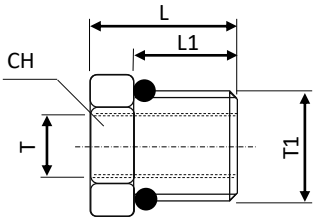

Codice-Code	CH	ØD	L	L1	L2	ØT	ØT1	max bar	
PC2224-G018-M005	14	-	11	6,5	-	G1/8"	M5	18	10
PC2224-G014-G018	17	-	13	8	-	G1/8"	G1/4"		
PC2224-G038-G018	20	-	14	9	-	G1/8"	G3/8"		
PC2224-G038-G014	20	-	14	9	-	G1/4"	G3/8"		
PC2224-G012-G018	24	-	16	10	-	G1/8"	G1/2"		
PC2224-G012-G014	24	-	16	10	-	G1/4"	G1/2"		
PC2224-G012-G038	24	-	16	10	-	G3/8"	G1/2"		

PC2218

NIPPLO OTTONE NICHELATO FEMMINA\FEMMINA FILETTO BSPP
NIKEL PLATED JUNCTION FEMALE\FEMALE BSPP THREAD

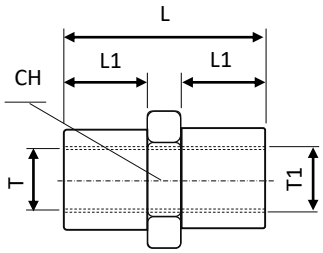

Codice-Code	CH	L	L1	ØT	ØT1	max bar	
PC2218-M005	8	11	3,5	M5	7,5	18	20
PC2218-G018	14	15	5	G1/8"	13,5		20
PC2218-G014-G018	17	12,5	6	G1/4"	G1/8"		25
PC2218-G014	17	22	8	G1/4"	16,5		20
PC2218-G038-G018	22	20	6	G3/8"	G1/8"		25
PC2218-G038-G014	22	21	7	G3/8"	G1/4"		20
PC2218-G038	22	24	8,5	G3/8"	21,5		20
PC2218-G012-G014	27	24	8	G1/2"	G1/4"		20
PC2218-G012-G038	27	24	8	G1/2"	G3/8"		20
PC2218-G012	27	29	10	G1/2"	26,5		15
PC2218-G034-G038	32	25	8	G3/4"	G3/8"		20
PC2218-G034-G012	32	25	8	G3/4"	G1/2"		15
PC2218-G034	32	29	10	G3/4"	31,5		15
PC2218-G100-G012	38	25	8	G1"	G1/2"		15
PC2218-G100-G034	38	25	8	G1"	G3/4"		15
PC2218-G100	38	31	11	G1"	37,5		10

PH1118

NIPPLO ACCIAIO ZINCATO FEMMINA\FEMMINA FILETTO BSPP
GALVANIZED STEEL JUNCTION FEMALE\FEMALE BSPP THREAD

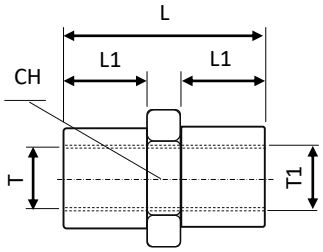

Codice-Code	CH	L	L1	ØT	ØT1	max Bar	
PH1118-G018	14	20	7	G1/8"	G1/8"	350	5
PH1118-G014	19	30	12	G1/4"	G1/4"	350	5
PH1118-G038-G014	24	30	12	G1/4"	G3/8"	250	5
PH1118-G038	24	30	12	G3/8"	G3/8"	225	5
PH1118-G012-G014	27	35	12	G1/4"	G3/8"	250	5
PH1118-G012-G038	27	35	12	G3/8"	G1/2"	250	5
PH1118-G012	27	38	15	G1/2"	G1/2"	250	5
PH1118-G034-G012	36	40	15	G1/2"	G3/4"	250	5
PH1118-G034	36	40	15	G3/4"	G3/4"	225	5
PH1118-G100	27	35	12	G3/8"	G1/2"	250	5
PH1118-G114	27	38	15	G1/2"	G1/2"	250	5
PH1118-G112	36	40	15	G1/2"	G3/4"	250	5

PC2318

NIPPLO ACCIAIO INOX FEMMINA\FEMMINA FILETTO BSPP
STAINLESS STEEL JUNCTION FEMALE\FEMALE BSPP THREAD

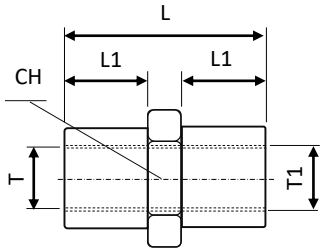

Codice-Code	CH	ØD	L1	ØT	ØT1	max Bar	
PC2318-G018	14	-	7	G1/8"	G1/8"	150	10
PC2318-G014	19	-	12	G1/4"	G1/4"		10
PC2318-G038	24	-	12	G3/8"	G3/8"		10
PC2318-G012	27	-	15	G1/2"	G1/2"		10
PC2318-G034	36	-	15	G3/4"	G3/4"		10
PC2318-G014-G018	17	7	9	G1/8"	G1/4"		5
PC2318-G038-G014	22	9,5	9,5	G1/4"	G3/8"		5
PC2318-G012-G014	27	9,5	11	G1/4"	G1/2"		5
PC2318-G012-G038	27	8	13	G3/8"	G1/2"		5
PC2318-G034-G012	32	11	15	G1/2"	G3/4"		5

PC2213

NIPPLO GIREVOLE OTTONE NICHELATO M/F FILETTO BSPP, O-RING NBR
NIKEL PLATED BRASS SWIVEL NIPPLE M/F BSPP THREAD, NBR O-RING

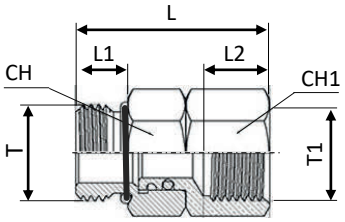

Codice-Code	CH	CH1	F	L	L1	L2	ØT	ØT1	max bar	
PC2213-G018	13	13	4,5	27	6,5	8	G1/8"	G1/8	18	15
PC2213-G014	16	16	7	32	8	11	G1/4"	G1/4		10
PC2213-G038	19	19	9	33,5	9	11,5	G3/8"	G3/8		10

PC2214

NIPPLO GIREVOLE OTTONE NICHELATO M/F FILETTO BSPT
NIKEL PLATED BRASS SWIVEL NIPPLE M/F BSPT THREAD

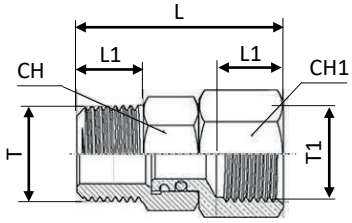

Codice-Code	CH	CH1	F	L	L1	L2	ØT	ØT1	max bar	
PC2214-R018	12	13	4,5	28	8	-	G1/8"	G1/8	18	15
PC2214-R014	14	16	7	34	11	-	G1/4"	G1/4		10
PC2214-R038	17	19	9	35,5	12	-	G3/8"	G3/8		10

PH1114

NIPPLO F\F IN ACCIAIO ZINCATO GIREVOLE BSPP CONO 60°
GALVANIZED STEEL F\F BSPP THREAD SWIVEL NIPPLE WITH 60° CONE

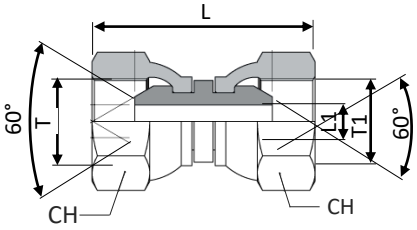

Codice-Code	CH	CH1	F	L	L1	L2	ØT	ØT1	max Bar	
PH1114-G018	15	-	4	36	-	-	G1/8"	G1/8	250	10
PH1114-G014	19	-	4	39	-	-	G1/4"	G1/4	250	10
PH1114-G038	22	-	7	46	-	-	G3/8"	G3/8	250	10
PH1114-G012	27	-	9	49	-	-	G1/2"	G3/8	200	5
PH1114-G034	32	-	15	60	-	-	G3/4"	G3/4	200	5
PH1114-G100	41	-	20	65	-	-	G1"	G1"	160	1
PH1114-G114	50	-	-	73	-	-	G1"1/4	G1"1	160	1
PH1114-G112	55	-	-	79	-	-	G1"1/2	G1"1	140	1
PH1114-M010	15	-	4	36	-	-	M10x1	M10x	250	10
PH1114-M014	19	-	4	38	-	-	M14x1,	M14x	250	10
PH1114-M016	22	-	6	43	-	-	M16x1,	M16x	250	5
PH1114-M020	27	-	8	46	-	-	M20x1,	M20x	200	5
PH1114-M024	27	-	14	50	-	-	M24x1,	M24x	200	1

PH1113 NIPPLO ORIENTABILE DRITTO IN ACCIAIO ZINCATO FILETTO M\F BSPP CONO 60°
GALVANIZED STEEL M\F\ BSPP THREAD SWIVEL STRAIGHT NIPPLE WITH 60° CONE

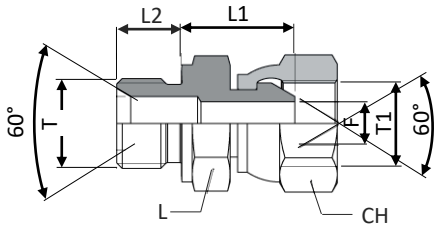

Codice-Code	CH	F	L	L1	L2	ØT	ØT1	max Bar	
PH1113-G018	14	4	14	20	8	G1/8"	G1/8"	400	5
PH1113-G014	19	4	19	25	11	G1/4"	G1/4"	400	5
PH1113-G038	22	7	22	27	12	G3/8"	G3/8"	400	5
PH1113-G012	27	9	27	30	14	G1/2"	G1/2"	350	5
PH1113-G034	32	15	32	37	16	G3/4"	G3/4"	315	1
PH1113-G100	41	20	41	45	19	G1"	G1"	250	1
PH1113-G114	55	-	45	55	23	G1"1/4	G1"1/4	200	1
PH1113-G112	65	-	48	65	25	G1"1/2	G1"1/2	200	1

PH1153 RIDUZIONE ORIENTABILE DRITTO IN ACCIAIO ZINCATO FILETTO M\F BSPP CONO 60°
GALVANIZED STEEL M\F\ BSPP THREAD SWIVEL REDUCTION NIPPLE WITH 60° CONE

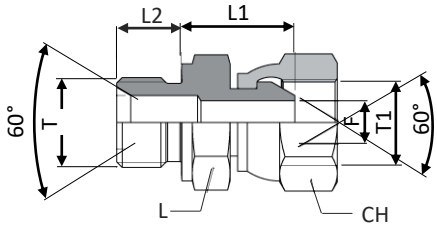

Codice-Code	CH	F	L	L1	L2	ØT	ØT1	max Bar	
PH1153-G038-G014	22	5	19	26	12	G3/8"	G1/4"	400	5
PH1153-G012-G038	27	8	22	28	14	G1/2"	G3/8"	350	5
PH1153-G034-G012	32	10	27	36	16	G3/4"	G1/2"	315	5

PH1163 MAGGIORAZIONE ORIENTABILE DRITTO IN ACCIAIO ZINCATO FILETTO M\F BSPP CONO 60°
GALVANIZED STEEL M\F\ BSPP THREAD SWIVEL ENLARGER NIPPLE WITH 60° CONE

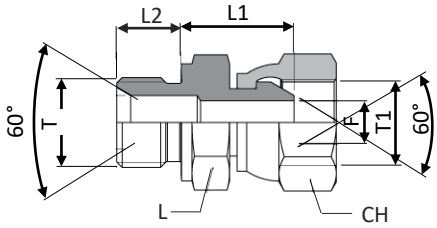

Codice-Code	CH	F	L	L1	L2	ØT	ØT1	max Bar	
PH1163-G018-G014	14	4	14	25	8	G1/8"	G1/4"	400	5
PH1163-G014-G038	19	4	22	26	11	G1/4"	G3/8"	400	5
PH1163-G038-G012	22	7	27	30	12	G3/8"	G1/2"	350	5
PH1163-G012-G034	27	9	32	35	14	G1/2"	G3/4"	315	5

Promec FITTINGS

PC2210

GOMITO IN OTTONE NICHELATO FILETTO MASCHIO CONICO BSPT
NIKEL PLATED BRASS ELBOW CONICAL BSPT MALE THREAD

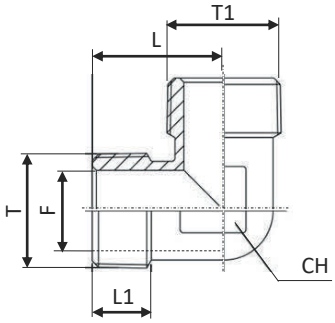

Codice-Code	CH	F	L	L1	ØT	ØT1	max Bar	
PC2210-M005	8	2,5	13,5	5	M5	M5	18	25
PC2210-R018	10	6	18,5	9	R1/8"	R1/8"		25
PC2210-R014	13	8,5	22	11,5	R1/4"	R1/4"		25
PC2210-R038	17	12	26	13	R3/8"	R3/8"		20
PC2210-R012	21	15	28,5	14	R1/2"	R1/2"		15
PC2210-R034	25	20	33	16	R3/4"	R3/4"		15
PC2210-R100	30	26	39	17	R1"	R1"		15

PH1110

GOMITO IN ACCIAIO ZINCATO FILETTO MASCHIO CONICO BSPT
GALVANIZED STEEL ELBOW CONICAL BSPT MALE THREAD

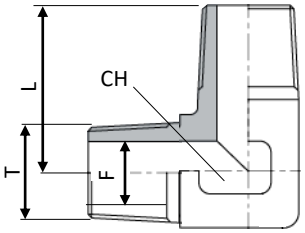

Codice-Code	CH	F	L	L1	ØT	ØT1	max Bar	
PH1110-R018	11	-	20	-	R1/8"	R1/8"	350	10
PH1110-R014	14	-	28	-	R1/4"	R1/4"	350	10
PH1110-R038	19	-	31	-	R3/8"	R3/8"	250	10
PH1110-R012	22	-	37,5	-	R1/2"	R1/2"	225	5
PH1110-R034	27	-	40	-	R3/4"	R3/4"	200	5
PH1110-R100	33	-	50	-	R1"	R1"	160	5

PC2310

GOMITO IN ACCIAIO ZINCATO FILETTO MASCHIO CONICO BSPT
GALVANIZED STEEL ELBOW CONICAL BSPT MALE THREAD

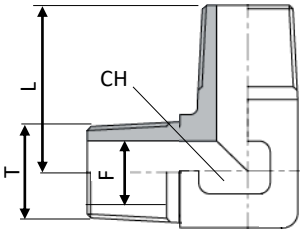

Codice-Code	CH	F	L	L1	ØT	ØT1	max Bar	
PC2310-R018	11	-	20	-	R1/8"	R1/8"	350	10
PC2310-R014	14	-	28	-	R1/4"	R1/4"	350	10
PC2310-R038	19	-	31	-	R3/8"	R3/8"	250	10
PC2310-R012	22	-	37,5	-	R1/2"	R1/2"	225	5
PC2310-R034	27	-	40	-	R3/4"	R3/4"	200	5
PC2310-R100	33	-	50	-	R1"	R1"	160	5

PH1137 GOMITO ACCIAIO ZINCATO FILETTO MASCHIO BSPP CON UN LATO ORIENTABILE
GALVANIZED STEEL ELBOW BSPP MALE THREAD WITH ONE SWIVEL SIDE

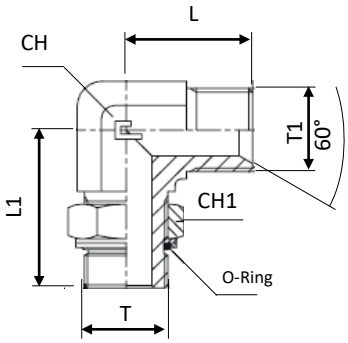

Codice-Code	CH	CH1	L	L1	ØT	ØT1	max Bar	
PH1137-G018	11	14	21	26	G1/8"	G1/8"	350	5
PH1137-G014	14	19	26	32	G1/4"	G1/4"	315	5
PH1137-G038	19	22	29	37	G3/8"	G3/8"	250	5
PH1137-G012	22	30	34	43	G1/2"	G1/2"	250	5
PH1137-G034	27	36	41	59	G3/4"	G3/4"	250	5
PH1137-G100	33	41	45	52	G1"	G1"	200	5

PH1167 MAGGIORAZIONE A GOMITO ACCIAIO ZINCATO FILETTO MASCHIO BSPP CON UN LATO ORIENTABILE
GALVANIZED STEEL ENLARGER ELBOW BSPP MALE THREAD WITH ONE SWIVEL SIDE

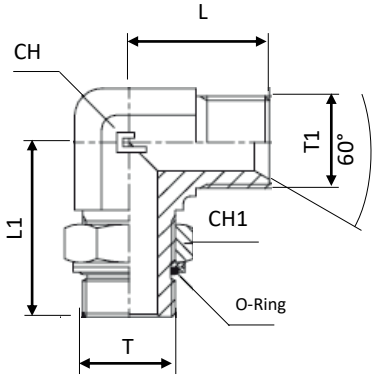

Codice-Code	CH	CH1	L	L1	ØT	ØT1	max Bar	
PH1167-G014-G018	14	14	26	30	G1/8"	G1/4"	350	5
PH1167-G038-G014	19	19	29	37	G1/4"	G3/8"	315	5
PH1167-G012-G038	22	22	34	39	G3/8"	G1/2"	250	5
PH1167-G034-G012	27	30	41	47	G3/4"	G1/2"	250	5
PH1167-G100-G034	33	36	45	50	G1"	G3/4"	250	5

PH1143 GOMITO ACCIAIO ZINCATO FILETTO MASCHIO BSPP E FEMMINA ORIENTABILE FILETTO BSPP
GALVANIZED STEEL ELBOW BSPP MALE THREAD AND SWIVEL BSPP FEMALE THREAD

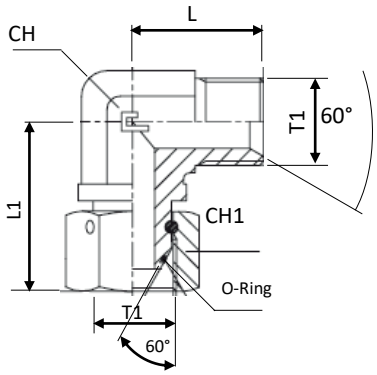

Codice-Code	CH	CH1	L	L1	ØT	ØT1	max Bar	
PH1143-G018	11	14	21	25	G1/8"	G1/8"	400	5
PH1143-G014	14	19	26	33	G1/4"	G1/4"	400	5
PH1143-G038	19	22	29	37	G3/8"	G3/8"	400	5
PH1143-G012	22	30	34	43	G1/2"	G1/2"	400	5
PH1143-G034	27	32	41	53,5	G3/4"	G3/4"	315	5
PH1143-G100	33	41	45	60,5	G1"	G1"	250	5

PH1147 GOMITO ACCIAIO ZINCATO MASCHIO-FEMMINA ORIENTABILI FILETTO BSPP
GALVANIZED STEEL SWIVEL MALE-FEMALE ELBOW BSPP THREAD

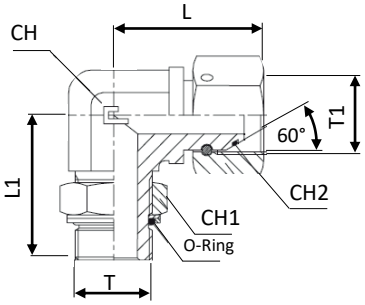

Codice-Code	CH	CH1	CH2	L	L1	ØT	ØT1	max Bar	
PH1147-G014	14	19	19	33	32	G1/4"	G1/4"	315	5
PH1147-G038	19	22	22	37	37	G3/8"	G3/8"	250	5
PH1147-G012	22	30	27	43	43	G1/2"	G1/2"	250	5
PH1147-G034	27	36	32	53,5	49	G3/4"	G3/4"	250	5
PH1147-G100	33	36	41	60,5	50	G1"	G1"	250	5

PH1142 CURVA A 90° FILETTO BSPP MASCHIO FISSO E FEMMINA ORIENTABILE
90° BSPP THREAD ELBOW FIXED MALE AND SWIVEL FEMALE

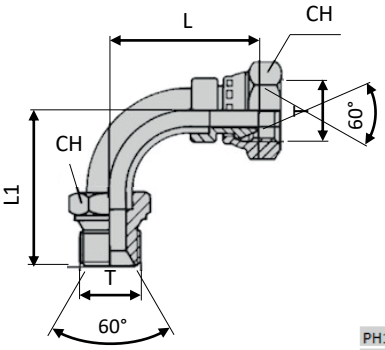

Codice-Code	CH	CH1	CH2	L	L1	ØT	ØT1	max Bar	
PH1142-G018	14	14	-	31	34	G1/8"	G1/8"	160	5
PH1142-G014	19	19	-	31	39	G1/4"	G1/4"	160	5
PH1142-G038	22	22	-	41	46	G3/8"	G3/8"	160	5
PH1142-G012	27	27	-	48	60	G1/2"	G1/2"	160	5
PH1142-G034	32	32	-	66	81	G3/4"	G3/4"	140	1
PH1142-G100	38	38	-	80	90	G1"	G1"	140	1
PH1142-G114	50	50	-	90	115	G1"1/4	G1"1/4	120	1
PH1142-G112	55	55	-	116	129	G1"1/2	G1"1/2	120	1

PC2211

GOMITO IN OTTONE NICHELATO FILETTO MASCHIO CONICO BSPT – FEMMINA CILINDRICA BSPP
NIKEL PLATED BRASS ELBOW BSPT CONICAL MALE THREAD – BSPP CILINDRICAL FEMALE THREAD

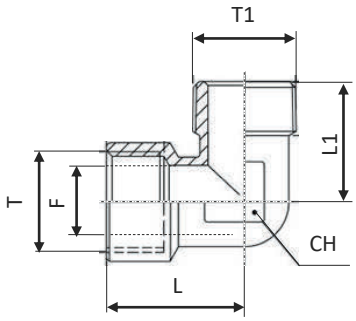

Codice-Code	CH	F	L	L1	ØT	ØT1	max Bar	
PC2211-M005	8	2,5	11	5	M5	M5		25
PC2211-R018-G018	10	6	19,5	9,5	R1/8"	G1/8"		25
PC2211-R014-G014	13	8,5	25	11,5	R1/4"	G1/4"		25
PC2211-R038-G038	17	12	27,5	13	R3/8"	G3/8"	18	20
PC2211-R012-G012	21	15	33,5	15	R1/2"	G1/2"		15
PC2211-R034-G034	25	20	36,5	16	R3/4"	G3/4"		15
PC2211-R100-G100	30	26	45	17	R1"	G1"		15

PC2311

GOMITO IN ACCIAIO INOX FILETTO MASCHIO CONICO BSPT – FEMMINA CILINDRICA BSPP
STAINLESS STEEL ELBOW CONICAL BSPT MALE THREAD – CILINDRICAL BSPP FEMALE THREAD

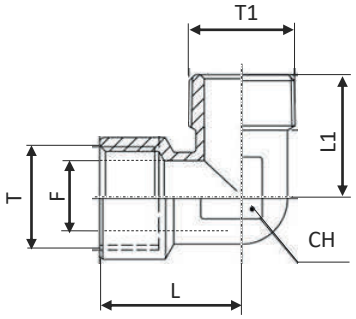

Codice-Code	CH	F	L	L1	T	T1	max Bar	
PC2311-G018-R018	13	4,8	24,1	19,6	G1/8"	R1/8"	400	10
PC2311-G014-R014	18	7,1	29	26,5	G1/4"	R1/4"	400	10
PC2311-G038-R038	21	9,6	34,5	28,2	G3/8"	R3/8"	350	10
PC2311-G012-R012	25	12	37	35,3	G1/2"	R1/2"	300	10
PC2311-G034-R034	32	16	46,5	39,6	G3/4"	R3/4"	300	10
PC2311-G100-R100	43	22	48,8	49,2	G1"	R1"	300	10

PC2212

GOMITO IN OTTONE NICHELATO FILETTO FEMMINA CILINDRICO BSPP
NIKEL PLATED BRASS ELBOW BSPT BSPP CILINDRICAL FEMALE THREAD

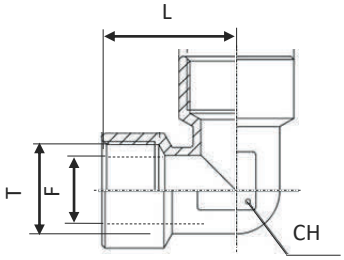

Codice-Code	CH	F	L	L1	ØT	ØT1	max Bar	
PC2212-M005	8	2,5	13,5	-	M5	-		20
PC2212-G018	10	6	18,5	-	G1/8"	G1/8"		20
PC2212-G014	13	8,5	22	-	G1/4"	G1/4"		20
PC2212-G038	17	12	26	-	G3/8"	G3/8"	18	20
PC2212-G012	21	15	28,5	-	G1/2"	G1/2"		15
PC2212-G034	25	20	33	-	G3/4"	G3/4"		15
PC2212-G100	30	26	39	-	G1"	G1"		10

PC2312

GOMITO IN ACCIAIO INOX FILETTO FEMMINA CILINDRICO BSPP
STAINLESS STEEL ELBOW BSPT BSPP CILINDRICAL FEMALE THREAD

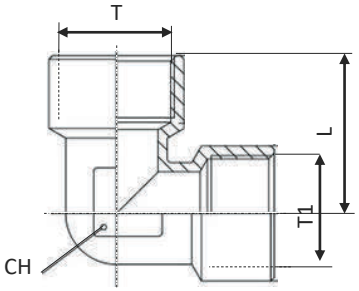

Codice-Code	CH	CH1	L	L1	T	max Bar	
PC2312-G018	12,7	-	26,4	-	G1/8"	400	10
PC2312-G014	17,5	-	29,7	-	G1/4"	400	10
PC2312-G038	20,6	-	36,1	-	G3/8"	350	10
PC2312-G012	25,4	-	39,6	-	G1/2"	300	10
PC2312-G034	31,8	-	48,8	-	G3/4"	300	10
PC2312-G100	42,9	-	48,5	-	G1"	300	10

PH1116

RACC. 90° IN ACCIAIO ZINCATO FILETTO BSPP FEMMINA-FEMMINA ORIENTABILI
GALVANIZED STEEL 90° BSPP THREAD ELBOW SWIVEL FEMALE

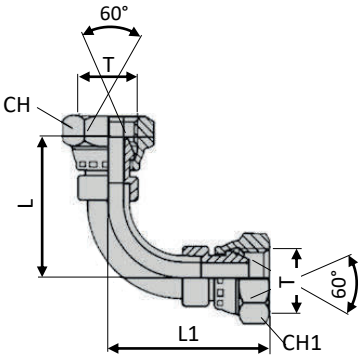

Codice-Code	CH	CH1	L	L1	ØT	max Bar	
PH1116-G018	15	15	32	32	G1/8"	25	5
PH1116-G014	19	19	36	36	G1/4"	25	5
PH1116-G038	22	22	41	41	G3/8"	25	5
PH1116-G012	27	27	48	48	G1/2"	20	5
PH1116-G034	32	32	66	66	G3/4"	20	1
PH1116-G100	41	41	80	80	G1"	15	1
PH1116-G114	50	50	100	100	G1"1/4	15	1
PH1116-G112	55	55	108	108	G1"1/2	15	1

PH1145

RACC. 45° IN ACCIAIO ZINCATO FILETTO MASCHIO BSPP UN LAT ORIENTABILE
GALVANIZED STEEL 45° BSPP MALE THREAD ELBOW SWIVEL ON ONE SIDE

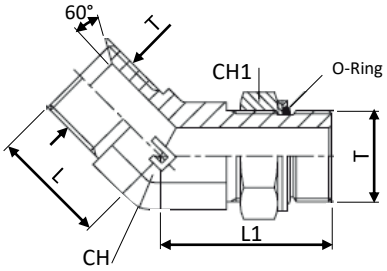

Codice-Code	CH	CH1	L	L1	ØT	max Bar	
PH1145-G018	11	14	20,5	26	G1/8"	400	5
PH1145-G014	14	19	21	29	G1/4"	400	5
PH1145-G038	19	22	23,5	33	G3/8"	400	5
PH1145-G012	22	30	26	38,5	G1/2"	400	5
PH1145-G034	27	36	32	44	G3/4"	315	5
PH1145-G100	47	33	37	47	G1"	250	5

PH1148 RACC. 45° IN ACCIAIO ZINCATO FILETTO BSPP MASCHIO FISSO E FEMMINA ORIENTABILE
GALVANIZED STEEL 45° BSPP THREAD ELBOW FIXED MALE AND SWIVEL FEMALE

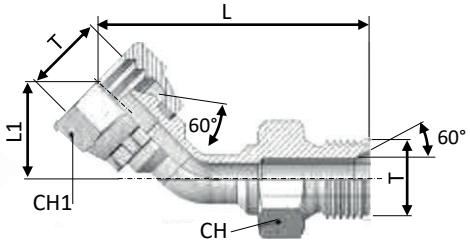

Codice-Code	CH	CH1	L	L1	ØT	ØT1	max Bar	
PH1148-G018	15	15	16	53	G1/8"	-	250	5
PH1148-G014	19	19	14	58	G1/4"	-	250	5
PH1148-G038	22	22	18	72	G3/8"	-	250	5
PH1148-G012	27	27	22	90	G1/2"	-	225	5
PH1148-G034	32	32	28	98	G3/4"	-	200	1
PH1148-G100	41	41	32	94	G1"	-	180	1
PH1148-G114	50	50	50	115	G1"1/4	-	140	1
PH1148-G112	55	55	52	123	G1"1/2	-	140	1

PH1141 RACC. 45° IN ACCIAIO ZINCATO FILETTO MASCHIO E FEMMINA BSPP ORIENTABILI
GALVANIZED STEEL 45° BSPP THREAD ELBOW SWIVEL MALE AND FEMALE

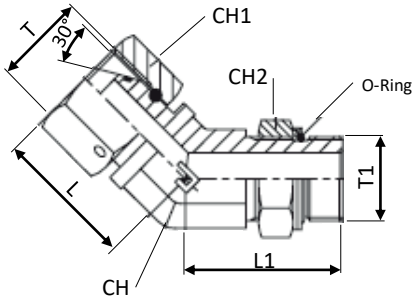

Codice-Code	CH	CH1	CH2	L	L1	ØT	max Bar	
PH1141-G018	11	14	14	23	26	G1/8"	400	5
PH1141-G014	14	19	19	25	29	G1/4"	400	5
PH1141-G038	19	22	22	29	33	G3/8"	400	5
PH1141-G012	22	30	27	32	38,5	G1/2"	400	5
PH1141-G034	27	36	32	41,5	44	G3/4"	315	5
PH1141-G100	33	36	41	45	47	G1"	250	5

PH1115 RACC. 45° IN ACCIAIO ZINCATO FILETTO BSPP FEMMINA-FEMMINA ORIENTABILI
GALVANIZED STEEL 45° BSPP THREAD ELBOW SWIVEL FEMALE

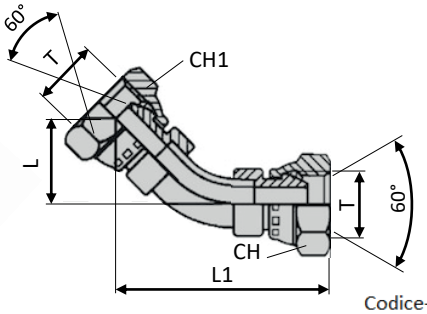

Codice-Code	CH	CH1	L	L1	ØT	ØT1	max Bar	
PH1115-G018	15	15	24	57	G1/8"	-	250	5
PH1115-G014	19	19	14	55	G1/4"	-	250	5
PH1115-G038	22	22	18	70	G3/8"	-	250	5
PH1115-G012	27	27	22	80	G1/2"	-	225	5
PH1115-G034	32	32	28	100	G3/4"	-	200	1
PH1115-G100	41	41	32	115	G1"	-	180	1
PH1115-G114	50	50	-	-	G1"1/4	-	140	1
PH1115-G112	55	55	-	-	G1"1/2	-	140	1

PH1138 CONNETTORE A "T" IN ACCIAIO ZINCATO FILETTO MASCHIO BSPP
GALVANIZED STEEL MALE TEE BSPP THREAD

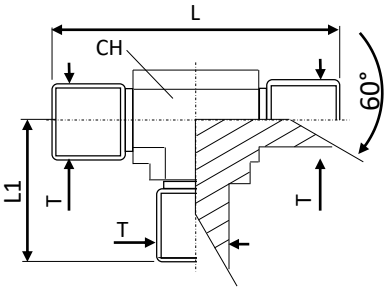

Codice-Code	CH	CH1	L	L1	ØT	max Bar	
PH1138-G018	11	-	42	-	G1/8"	400	5
PH1138-G014	14	-	52	-	G1/4"	400	5
PH1138-G038	19	-	58	-	G3/8"	400	5
PH1138-G012	22	-	68	-	G1/2"	350	5
PH1138-G034	27	-	82	-	G3/4"	315	1
PH1138-G100	33	-	90	-	G1"	250	1
PH1138-G114	41	-	104	-	G1"1/4	250	1
PH1138-G112	48	-	118	-	G1"1/2	200	1

PH1139 CONNETTORE A "T" IN ACCIAIO ZINCATO FILETTO MASCHIO BSPP CON LATO ORIENTABILE
GALVANIZED STEEL MALE TEE BSPP THREAD WITH SWIVEL SIDE

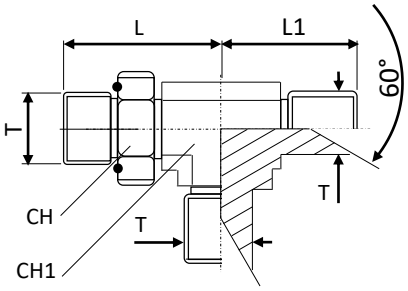

Codice-Code	CH	CH1	L	L1	ØT	max Bar	
PH1139-G018	11	11	26	21	G1/8"	350	5
PH1139-G014	14	14	32	26	G1/4"	315	5
PH1139-G038	19	19	37	29	G3/8"	250	5
PH1139-G012	22	30	43	34	G1/2"	250	5
PH1139-G034	27	36	49	41	G3/4"	250	1
PH1139-G100	33	41	52	45	G1"	200	1
PH1139-G114	41	50	58	52	G1"1/4	250	1
PH1139-G112	48	55	60	59	G1"1/2	200	1

PH1140 CONNETTORE A "T" IN ACCIAIO ZINCATO FILETTO MASCHIO BSPP CON BASE ORIENTABILE
GALVANIZED STEEL MALE TEE BSPP THREAD WITH SWIVEL BASE

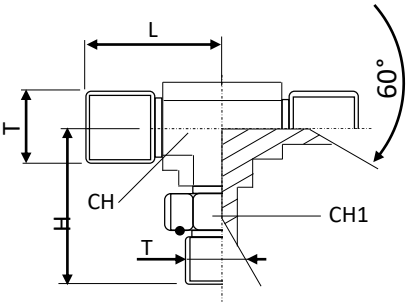

Codice-Code	CH	CH1	H	L	ØT	max Bar	
PH1140-G018	11	14	26	21	G1/8"	350	5
PH1140-G014	14	19	32	26	G1/4"	315	5
PH1140-G038	19	22	37	29	G3/8"	250	5
PH1140-G012	22	30	43	34	G1/2"	250	5
PH1140-G034	27	36	49	41	G3/4"	250	1
PH1140-G100	33	41	52	45	G1"	200	1
PH1140-G114	41	50	58	52	G1"1/4	250	1
PH1140-G112	48	55	60	59	G1"1/2	200	1

PH1144

CONNETTORE A "T" IN ACCIAIO ZINCATO FILETTO MASCHIO BSPP CON BASE ORIENTABILE FEMMINA
GALVANIZED STEEL MALE TEE BSPP THREAD WITH FEMALE SWIVEL BASE

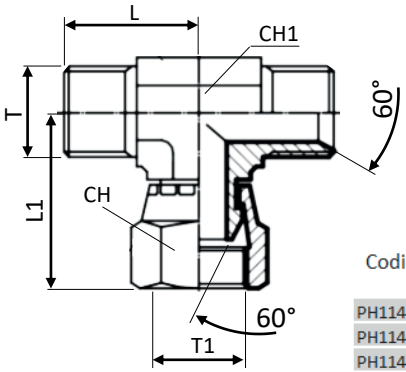

Codice-Code	CH	CH1	H	L	L1	ØT	ØT1	max Bar	
PH1144-G018	14	11	25	21	-	G1/8"	G1/8"	250	5
PH1144-G014	19	14	33	26	-	G1/4"	G1/4"	250	5
PH1144-G038	22	19	37	29	-	G3/8"	G3/8"	250	5
PH1144-G012	27	22	43	34	-	G1/2"	G1/2"	200	2
PH1144-G034	32	27	53,5	41	-	G3/4"	G3/4"	160	1
PH1144-G100	41	33	60,5	45	-	G1"	G1"	140	1
PH1144-G114	50	41	72,5	52	-	G1"1/4	G1"1/4	120	1
PH1144-G112	55	18	91	59	-	G1"1/2	G1"1/2	120	1

PH1124

CONNETTORE A "T" IN ACCIAIO ZINCATO FILETTO MASCHIO CON LATO FEMMINA GIREVOLE BSPP
GALVANIZED STEEL MALE TEE BSPP THREAD AND ONE SIDE WITH SWIVEL FEMALE THREAD

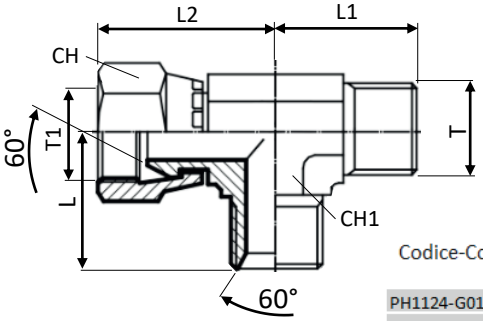

Codice-Code	CH	CH1	L	L1	L2	ØT	ØT1	max Bar	
PH1124-G018	14	11	21	20	26	G1/8"	G1/8"	250	5
PH1124-G014	19	14	26	27	32	G1/4"	G1/4"	250	5
PH1124-G038	22	19	29	30	36	G3/8"	G3/8"	250	5
PH1124-G012	27	22	34	37	40	G1/2"	G1/2"	200	2
PH1124-G034	32	27	41	40	54,5	G3/4"	G3/4"	160	2
PH1124-G100	41	33	45	50	55,5	G1"	G1"	140	1
PH1124-G114	50	41	57	52	59	G1"1/4	G1"1/4	120	1
PH1124-G112	55	48	49	59	72,5	G1"1/2	G1"1/2	120	1

PH1117

CONNETTORE A "T" IN ACCIAIO ZINCATO FILETTO FEMMINA GIREVOLE BSPP
GALVANIZED STEEL FEMALE TEE BSPP SWIVEL THREAD

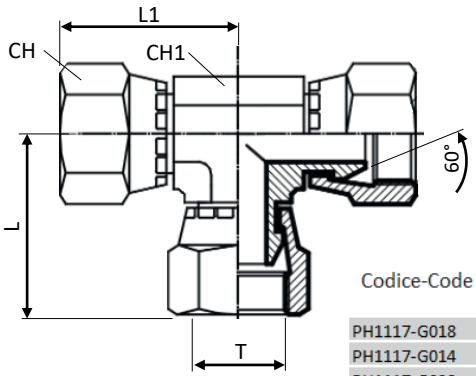

Codice-Code	CH	CH1	L	L1	L2	ØT	ØT1	max Bar	
PH1117-G018	14	11	25	25	-	G1/8"	-	250	5
PH1117-G014	19	14	29	29	-	G1/4"	-	250	5
PH1117-G038	22	19	34	34	-	G3/8"	-	250	5
PH1117-G012	27	22	40	40	-	G1/2"	-	200	2
PH1117-G034	32	27	42,5	45,5	-	G3/4"	-	160	2
PH1117-G100	41	33	52	52	-	G1"	-	140	1
PH1117-G114	50	41	75,5	64	-	G1"1/4	-	120	1
PH1117-G112	55	48	91	75,6	-	G1"1/2	-	120	1

PC2217 CONNETTORE A "T" FILETTO FEMMINA BSPP
FEMALE TEE BSPP THREAD

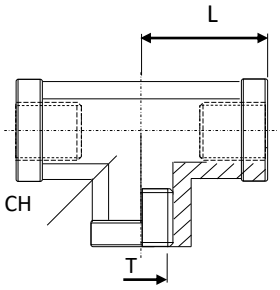

Codice-Code	CH	B	L	ØF	ØT	max Bar	
PC2217-G018	10	-	20	-	G1/8"	35	5
PC2217-G014	13	-	25	-	G1/4"	35	5
PC2217-G038	17	-	28,5	-	G3/8"	35	5
PC2217-G012	21	-	34,3	-	G1/2"	25	5
PC2217-G034	25	-	36,5	-	G3/4"	25	5
PC2217-G100	30	-	45	-	G1"	20	5

PH1128 CONNETTORE A "T" IN ACCIAIO ZINCATO FILETTO FEMMINA BSPP
GALVANIZED STEEL FEMALE TEE BSPP THREAD

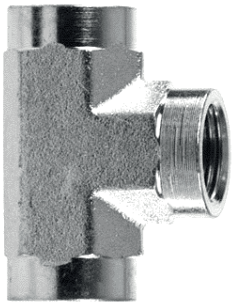

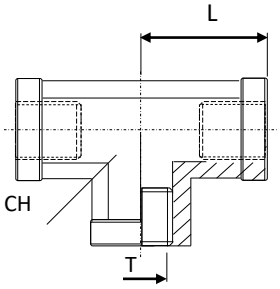

Codice-Code	CH	B	L	ØF	ØT	max Bar	
PH1128-G018	14	-	17	-	G1/8"	400	5
PH1128-G014	19	-	22,5	-	G1/4"	400	5
PH1128-G038	22	-	26	-	G3/8"	400	5
PH1128-G012	27	-	31	-	G1/2"	400	5
PH1128-G034	33	-	34,5	-	G3/4"	400	5
PH1128-G100	41	-	41	-	G1"	315	5

PC2246 RACCORDO A GOMITO GIREVOLE
SWIVEL CONNECTOR

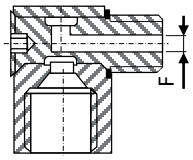

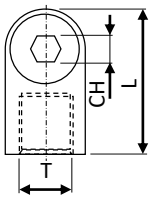

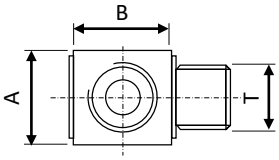

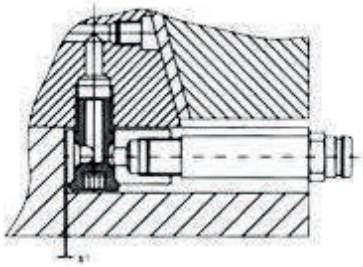

Codice-Code	A	B	CH	ØF	L	T	
PC2246-M010	14	14	5	4,5	25	M10x1	5
PC2246-G018	14	14	5	4,5	25	1/8"	5
PC2246-G014	19	19	6	6	36	1/4"	5
PC2246-G038	25	30	8	9	35	3/8"	5
PC2246-G012	30	30	10	11	50	1/2"	5

PC2249

PROLUNGA FILETTO MASCHIO-FEMMINA BSPP
BSPP THREAD MALE-FEMALE EXTENTION PLUG

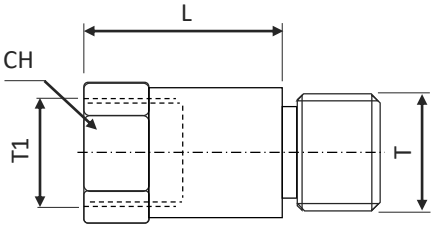

Codice-Code	CH	L	L1	L2	ØT	ØT1	max bar	
PC2249-G014-L020	17	20	-	-	G1/4"	G1/4"	18	5
PC2249-G014-L040	17	40	-	-	G1/4"	G1/4"		5
PC2249-G038-L020	21	20	-	-	G3/8"	G3/8"		5
PC2249-G038-L040	21	40	-	-	G3/8"	G3/8"		5
PC2249-G012-L020	27	20	-	-	G1/2"	G1/2"		1
PC2249-G012-L040	27	40	-	-	G1/2"	G1/2"		1

PH1150

PROLUNGA IN ACCIAIO ZINCATO MASCHIO-FEMMINA FILETTO BSPP
GALVANIZED STEEL MALE-FEMALE EXTENSION PLUG WITH BSPP THREAD

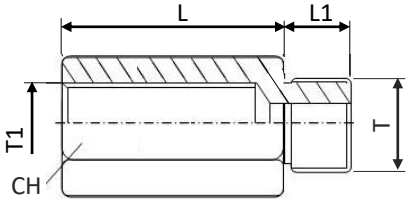

Codice-Code	CH	L	L1	L2	ØT	ØT1	max Bar	
PH1150-G014-L021	19	11	21	-	G1/4"	G1/4"	350	10
PH1150-G014-L030	19	11	30	-	G1/4"	G1/4"	350	10
PH1150-G014-L043	19	11	43	-	G1/4"	G1/4"	350	10
PH1150-G014-L048	19	11	48	-	G1/4"	G1/4"	350	10
PH1150-G038-L020	22	12	20	-	G3/8"	G3/8"	350	10
PH1150-G038-L033	22	12	33	-	G3/8"	G3/8"	350	10
PH1150-G038-L038	22	12	38	-	G3/8"	G3/8"	350	10
PH1150-G038-L045	22	12	45	-	G3/8"	G3/8"	350	10
PH1150-G012-L023	27	14	23	-	G1/2"	G1/2"	350	5
PH1150-G012-L046	27	14	46	-	G1/2"	G1/2"	350	5
PH1150-G012-L066	27	14	66	-	G1/2"	G1/2"	350	5

PC2271

GOMITO IN OTTONE NICHELATO FILETTO MASCHIO – FEMMINA BSPP
NIKEL PLATED BRASS ELBOW WITH BSPP MALE – FEMALE THREAD

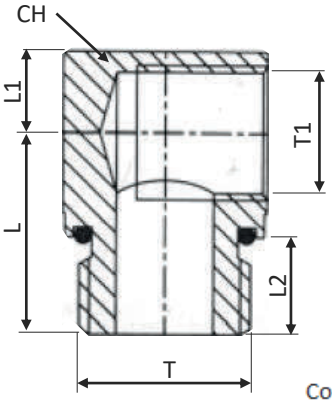

Codice-Code	CH	L	L1	L2	ØT	ØT1	max bar	
PC2271-G018	15	17	8	9	G1/8"	G1/4"	18	5
PC2271-G014	20	19	8,5	9	G1/4"	G3/8"		5
PC2271-G012	25	25	10	15	G1/2"	G3/8"		5

PC2238

PROLUNGA IN ACCIAIO ZINCATO FILETTO FEMMINA BSPP – MASCHIO CONICO BSPT
GALVANIZED STEEL EXTENSION PLUG WITH FEMALE BSPP AND MALE BSPT CONICAL THREAD

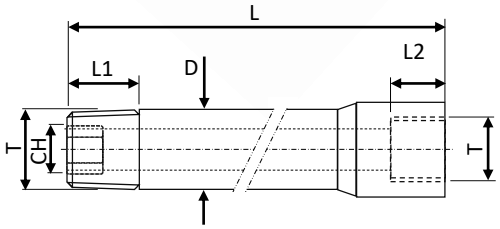

Codice-Code	CH	ØD	L	L1	L2	T	T1
PC2238-10-R018-L050	5	10	50	9	11	R 1/8"	G 1/8"
PC2238-10-R018-L075	5	10	75	9	11	R 1/8"	G 1/8"
PC2238-10-R018-L100	5	10	100	9	11	R 1/8"	G 1/8"
PC2238-10-R018-L125	5	10	125	9	11	R 1/8"	G 1/8"
PC2238-14-R014-L050	8	14	50	10	12	R 1/4"	G 1/4"
PC2238-14-R014-L075	8	14	75	10	12	R 1/4"	G 1/4"
PC2238-14-R014-L100	8	14	100	10	12	R 1/4"	G 1/4"
PC2238-14-R014-L125	8	14	125	10	12	R 1/4"	G 1/4"
PC2238-14-R014-L150	8	14	150	10	12	R 1/4"	G 1/4"

PC2239

PROLUNGA IN ACCIAIO ZINCATO CON FILETTO MASCHIO BSPP
GALVANIZED STEEL EXTENSION PLUG WITH BSPP MALE THREAD

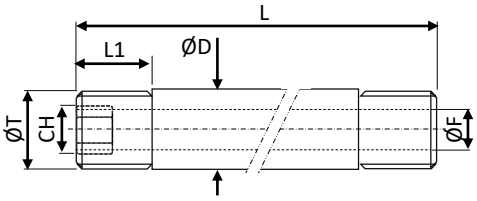

Codice-Code	CH	ØD	F	L	L1	L2	T
PC2239-10-G018-L050	5	9	6	50	12	-	G 1/8"
PC2239-10-G018-L100	5	9	6	100	12	-	G 1/8"
PC2239-10-G018-L150	5	9	6	150	12	-	G 1/8"
PC2239-10-G018-L200	5	9	6	200	12	-	G 1/8"
PC2239-10-G018-L250	5	9	6	250	12	-	G 1/8"
PC2239-14-G014-L050	7	12	9	50	12	-	G 1/4"
PC2239-14-G014-L100	7	12	9	100	12	-	G 1/4"
PC2239-14-G014-L150	7	12	9	150	12	-	G 1/4"
PC2239-14-G014-L200	7	12	9	200	12	-	G 1/4"
PC2239-14-G014-L250	7	12	9	250	12	-	G 1/4"
PC2239-17-G038-L050	10	16	13	50	12	-	G 3/8"
PC2239-17-G038-L100	10	16	13	100	12	-	G 3/8"
PC2239-17-G038-L150	10	16	13	150	12	-	G 3/8"
PC2239-17-G038-L200	10	16	13	200	12	-	G 3/8"
PC2239-17-G038-L250	10	16	13	250	12	-	G 3/8"
PC2239-22-G012-L100	-	22	16	100	-	-	G 1/2"
PC2239-22-G012-L150	-	22	16	150	-	-	G 1/2"
PC2239-22-G012-L200	-	22	16	200	-	-	G 1/2"
PC2239-22-G012-L250	-	22	16	250	-	-	G 1/2"

PC2215

PROLUNGA IN OTTONE LISCIA CON FILETTO FEMMINA METRICO
BRASS EXTENSION SMOOTH PLUG WITH METRIC FEMALE THREAD

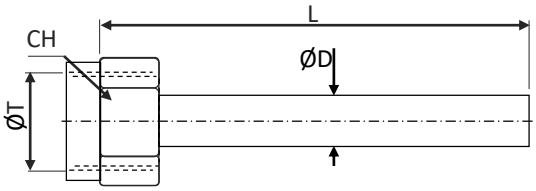

Codice-Code		CH	ØD	F	L	L1	T
PC2215-10-M014-L120		17	10	6	120	15,5	M14x1,5
PC2215-10-M014-L240		17	10	6	240	15,5	M14x1,5
PC2215-14-M016-L150		22	10	9	150	15,5	M16x1,5
PC2215-14-M016-L300		22	10	9	300	15,5	M16x1,5
PC2215-21-M024-L500		30	14	13	500	21	M24x1,5
PC2215-21-M024-L800		30	14	13	800	21	M24x1,5

PROLUNGHE CON PORTAGOMMA A PAG. 136
EXTENSIONS WITH HOSE TAIL AT PAG. 136

PC2255 VITE CAVA PER RACCORDO AD OCCHIELLO
BOLT FOR BANJO FITTING

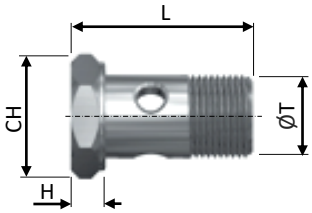

Codice-Code	CH	ØF	H	L	T	T1	
PC2255-G018	14	-	5	26	G1/8"	-	5
PC2255-G014	19	-	6	33	G1/4"	-	5
PC2255-G038	22	-	7	39	G3/8"	-	5
PC2255-G012	27	-	8	46	G1/2"	-	1
PC2255-G034	32	-	10	56	G3/4"	-	1
PC2255-G100	38	-	12	72	G1"	-	1

PC2256 RACCORDO AD OCCHIELLO CON FILETTO FEMMINA BSPP
BANJO FITTING WITH BSPP FEMALE THREAD

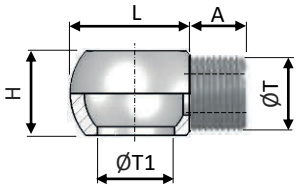

Codice-Code	A	ØF	H	L	T	T1	
PC2256-G018-G018	9.5	4.2	10	16.5	G1/8"	G1/8"	5
PC2256-G014-G014	14	6	14	22	G1/4"	G1/4"	5
PC2256-G038-G038	17	8	18	38	G3/8"	G3/8"	5
PC2256-G038-G014	14	6	18	38	G3/8"	G1/4"	5
PC2256-G012-G012	17	12	22.5	33	G1/2"	G1/2"	1
PC2256-G012-G038	14	9	23	36	G1/2"	G3/8"	1
PC2256-G034-G034	-	-	30	-	G3/4"	G3/4"	1
PC2256-G100-G100	-	-	38	-	G1"	G1"	1

PH1199 RONDELLA BONDED CON GUARNIZIONE
BONDED RING WITH SEAL

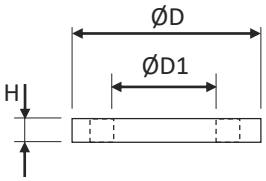

Codice-Code	misura size	ØD	ØD1	tipo O-Ring O-Ring type	H	
PH1199-018-N	1/8"	16	10,4	NBR	2	30
PH1199-018-V	1/8"	16	10,4	FKM	2	15
PH1199-014-N	1/4"	20,5	13,7	NBR	2	30
PH1199-014-V	1/4"	20,5	13,7	FKM	2	15
PH1199-038-N	3/8"	24	17,3	NBR	2	30
PH1199-038-V	3/8"	24	17,3	FKM	2	15
PH1199-012-N	1/2"	28,5	21,5	NBR	2,5	20
PH1199-012-V	1/2"	28,5	21,5	FKM	2,5	10
PH1199-034-N	3/4"	35	27	NBR	2,5	20
PH1199-034-V	3/4"	35	27	FKM	2,5	10
PH1199-100-N	1"	43	33,9	NBR	2,5	5
PH1199-100-V	1"	43	33,9	FKM	2,5	5
PH1199-114-N	1"1/4	52,5	42,9	NBR	2,5	20
PH1199-114-V	1"1/4	52,5	42,9	FKM	2,5	10
PH1199-112-N	1"1/2	58,5	48,4	NBR	2,5	5
PH1199-112-V	1"1/2	58,5	48,4	FKM	2,5	5

PH1198 RONDELLA RAME
COPPER SEAL

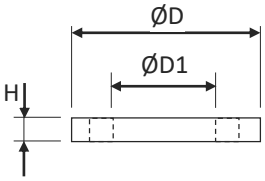

Codice-Code	misura size	ØD	ØD1	tipo O-Ring O-Ring type	H	
PH1198-018	1/8"	16	10	-	1,5	50
PH1198-014	1/4"	19	13,5	-	1,5	50
PH1198-038	3/8"	22	17	-	1,5	50
PH1198-012	1/2"	27	21,5	-	1,5	50
PH1198-034	3/4"	33	27	-	1,5	25
PH1198-100	1"	40	33,5	-	1,5	25
PH1198-114	1"1/4	50	42	-	1,5	10
PH1198-112	1"1/2	55	48	-	1,5	10

126 PC2226

PC2227

PC2228

PC2328 127

128 PC2230

PC2231

PC2259

PC2233 129

130 PH1001

PH1002 131

132 PC2234

PC2248

PC2229

PC2247 133

134 PH1003

PC2261

PC2235 135

136 PC2237

PC2232

PC2263 137

138 PC2255

PC2257

PC2258

PH1199

PH1198

140 PC5102-04

PC5111-12

PC5110

PC5101

PC5121 141

142 PC4601

PC4651

PC1051

PC4351

PC4701 143

144 PC5910

PC5901

PC5902

PC5801

PC5802

PC5803 145

Promec FITTINGS

PC2226 RACCORDO PORTAGOMMA OTTONE FILETTO MASCHIO BSPP
BRASS HOSE TAIL WITH BSPP MALE THREAD

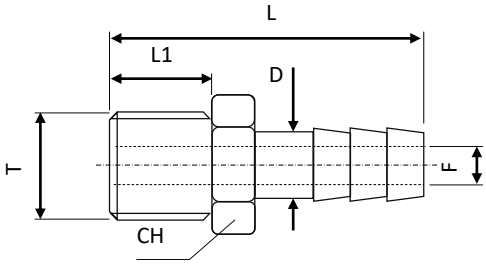

Codice-Code	CH	ØD tubo/hose		ØF	L	L1	T	
PC2226-06-M005	8	6	1/4"	4	22	4	M5	25
PC2226-06-M006	8	6	1/4"	4	22	4	M6	25
PC2226-06-G018	12	6	1/4"	4	29,5	6	G1/8"	10
PC2226-06-G014	14	6	1/4"	4	32	8	G1/4"	10
PC2226-08-G018	12	8	5/16"	5	29,5	6	G1/8"	25
PC2226-08-G014	14	8	5/16"	5	32	8	G1/4"	25
PC2226-08-G038	19	8	5/16"	5	33	9	G3/8"	25
PC2226-09-G018	12	9	5/14"	6	29,5	6	G1/8"	25
PC2226-09-G014	14	9	5/14"	6	32	8	G1/4"	25
PC2226-09-G038	19	9	5/14"	6	33	9	G3/8"	25
PC2226-10-G018	12	10	3/8"	7	30,5	6	G1/8"	10
PC2226-10-G014	14	10	3/8"	7	33	8	G1/4"	10
PC2226-10-G038	19	10	3/8"	7	34	9	G3/8"	10
PC2226-10-G012	22	10	3/8"	7	38	10	G1/2"	10
PC2226-12-G014	14	12	5/32"	8	33	8	G1/4"	25
PC2226-12-G038	19	12	5/32"	8	34	9	G3/8"	25
PC2226-12-G012	22	12	5/32"	8	35,5	10	G1/2"	25
PC2226-13-G014	15	13	1/2"	9	31	8	G1/4"	10
PC2226-13-G038	19	13	1/2"	9	37	9	G3/8"	10
PC2226-13-G012	22	13	1/2"	9	40	10	G1/2"	10
PC2226-16-G038	19	16	5/8"	11	52	12	G3/8"	10
PC2226-16-G012	23	16	5/8"	11	54	14	G1/2"	10
PC2226-16-G034	27	16	5/8"	11	58	14	G3/4"	10
PC2226-19-G012	22	19	3/4"	14	46	-	G1/2"	10
PC2226-19-G034	27	19	3/4"	14	49	-	G3/4"	10
PC2226-19-G100	36	19	3/4"	14	49	-	G1"	10

Raccordatura raccomandata – recommended clamping – p.140-141

PC2227 RACCORDO PORTAGOMMA OTTONE NICHELATO FILETTO MASCHIO BSPP O-R NBR
NIKEL PLATED BRASS HOSE TAIL WITH BSPP MALE THREAD AND NBR O-RING

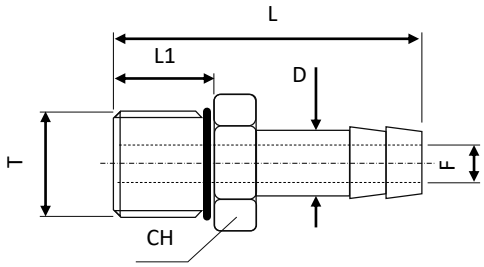

Codice-Code	CH	ØD tubo/hose		ØF	L	L1	T	
PC2227-06-G018	14	6	1/4"	4	30	6,5	G1/8"	25
PC2227-06-G014	17	6	1/4"	4	32	8	G1/4"	25
PC2227-08-G018	14	8	5/16"	5	30	6,5	G1/8"	25
PC2227-08-G014	17	8	5/16"	5	32	8	G1/4"	25
PC2227-09-G018	14	9	5/14"	6	30	6,5	G1/8"	25
PC2227-09-G014	17	9	5/14"	6	32	8	G1/4"	25
PC2227-09-G038	20	9	5/14"	6	33	9	G3/8"	15
PC2227-12-G014	17	12	5/32"	8	33	8	G1/4"	25
PC2227-12-G038	20	12	5/32"	8	34	9	G3/8"	15
PC2227-12-G012	24	12	5/32"	8	35,5	10	G1/2"	15

Raccordatura raccomandata – recommended clamping – p.140-141

PC2228 RACCORDO PORTAGOMMA IN OTTONE NICHELATO FILETTO MASCHIO BSPT
NIKEL PLATED HOSE TAIL WITH BSPT MALE THREAD

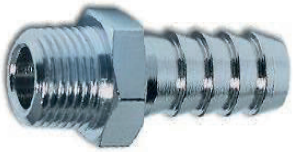

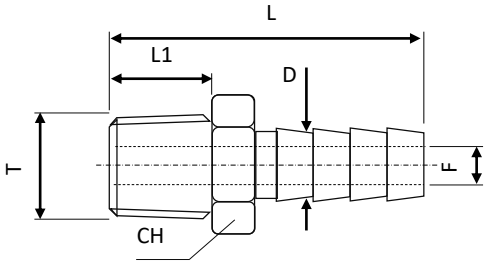

Codice-Code	CH	ØD tubo/hose		ØF	L	L1	L2	T	
PC2228-06-R018	12	6	1/4"	4	31,5	8	-	R1/8"	25
PC2228-06-R014	14	6	1/4"	4	35	11	-	R1/4"	25
PC2228-08-R018	12	8	5/16"	5	31,5	8	-	R1/8"	25
PC2228-08-R014	14	8	5/16"	5	35	11	-	R1/4"	25
PC2228-09-R018	12	9	5/14"	6	31,5	8	-	R1/8"	25
PC2228-09-R014	14	9	5/14"	6	35	11	-	R1/4"	25
PC2228-09-R038	17	9	5/14"	6	35,5	12	-	R3/8"	15
PC2228-09-R012	22	9	5/14"	6	38,5	14	-	R1/2"	15
PC2228-10-R018	12	10	3/8"	7	32,5	8	-	R1/8"	25
PC2228-10-R014	14	10	3/8"	7	36	11	-	R1/4"	25
PC2228-10-R038	17	10	3/8"	7	36,5	12	-	R3/8"	15
PC2228-12-R014	14	12	5/32"	8	36	11	-	R1/4"	25
PC2228-12-R038	17	12	5/32"	8	36,5	12	-	R3/8"	15
PC2228-12-R012	22	12	5/32"	8	39,5	14	-	R1/2"	15
PC2228-16-R038	17	16	5/8"	11	38,5	12	-	R3/8"	15
PC2228-16-R012	22	16	5/8"	11	41,5	14	-	R1/2"	15
PC2228-16-R034	27	16	5/8"	11	45	17	-	R3/4"	10
PC2228-20-R038	22	20	-	15	41	12	-	R3/8"	15
PC2228-20-R012	22	20	-	15	43,5	14	-	R1/2"	15
PC2228-20-R034	27	20	-	15	46,5	17	-	R3/4"	10

Raccordatura raccomandata – recommended clamping – p.140-141

PC2328 RACCORDO PORTAGOMMA IN ACCIAIO INOX FILETTO MASCHIO BSPT
STAINLESS STEEL HOSE TAIL WITH BSPT MALE THREAD

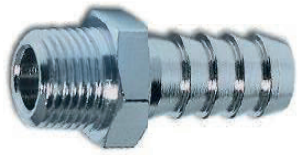

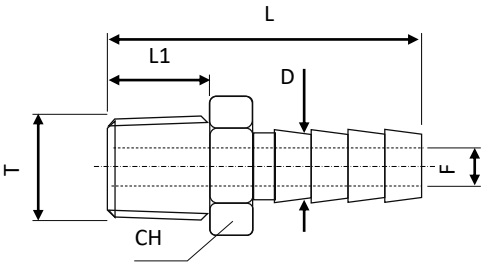

Codice-Code	CH	ØD	ØD1	L	L1	T	T1	max Bar	
PC2328-R018	12	6	4	34	9	R1/8"	-	20	10
PC2328-R014	14	8	5,5	36	10,5	R1/4"	-	20	10
PC2328-R038	17	10	8	42	11,5	R3/8"	-	20	10
PC2328-R012	22	14	11	51	15	R1/2"	-	20	10
PC2328-R034	27	20	14	65	18	R3/4"	-	20	10

Raccordatura raccomandata – recommended clamping – p.140-141

PC2230

RACCORDO PORTAGOMMA IN OTTONE NICHELATO FIL. MASCHIO BSPP PROFILO EASY-LOCK
NIKEL PLATED BRASS EASY LOCK HOSE TAIL WITH BSPP MALE THREAD

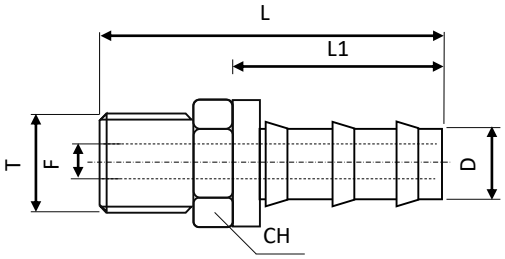

Codice-Code	CH	ØD tubo/hose		ØF	L	L1	L2	T	
PC2230-06-G018	13	6,3	1/4"	4	31,5	6,5	20	G1/8"	10
PC2230-06-G014	17	6,3	1/4"	4	35	8	20	G1/4"	10
PC2230-10-G014	17	9,5	3/8"	7,5	39,1	8	24,1	G1/4"	10
PC2230-10-G038	22	9,5	3/8"	7,5	42,5	9	24,1	G3/8"	10
PC2230-13-G038	22	13	1/2"	10	46,5	9	28	G3/8"	10
PC2230-13-G012	27	13	1/2"	10	48,5	10	28	G1/2"	10
PC2230-16-G012	27	16	5/8"	14	56,5	10	36,5	G1/2"	10
PC2230-16-G034	32	16	5/8"	14	58,5	11	36,5	G3/4"	10
PC2230-19-G034	32	19	3/4"	16	65,3	11	43	G3/4"	10

PC2231

RACCORDO PORTAGOMMA IN OTTONE NICHELATO FILETTO FEMINA BSPP
NIKEL PLATED HOSE TAIL WITH BSPP FEMALE THREAD

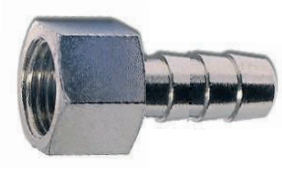

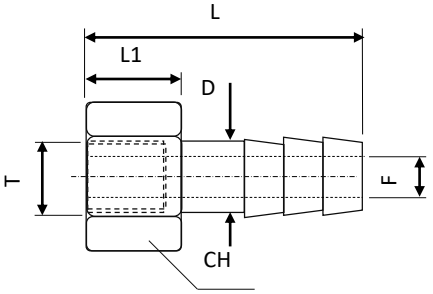

Codice-Code	CH	ØD tubo/hose		ØF	L	L1	L2	T	
PC2231-06-G018	11	6	1/4"	4	27	10	-	G1/8"	25
PC2231-06-G014	17	6	1/4"	4	33	13	-	G1/4"	25
PC2231-08-G018	12	8	5/16"	5	27	10	-	G1/8"	25
PC2231-08-G014	17	8	5/16"	5	33	13	-	G1/4"	25
PC2231-09-G018	12	9	5/14"	6	27	10	-	G1/8"	20
PC2231-09-G014	17	9	5/14"	6	33	13	-	G1/4"	20
PC2231-10-G014	17	10	3/8"	7	36	-	-	G1/4"	20
PC2231-10-G038	19	10	3/8"	7	36	-	-	G3/8"	15
PC2231-10-G012	24	10	3/8"	7	39	-	-	G1/2"	15
PC2231-13-G014	17	13	1/2"	7	36	-	-	G1/4"	15
PC2231-13-G038	19	13	1/2"	7	36	-	-	G3/8"	15
PC2231-13-G012	24	13	1/2"	7	39	-	-	G1/2"	15
PC2231-16-G012	24	16	5/8"	12	43	-	-	G1/2"	10

Raccordatura raccomandata – recommended clamping – p.140-141

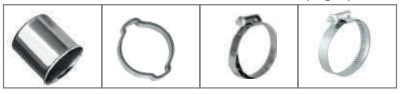

PC2259 PORTAGOMMA IN ACCIAIO ZINCATO FILETTO FEMMINA BSPP GIREVOLE
GALVANIZED STEEL SWIVEL HOSE TAIL WITH BSPP FEMALE THREAD

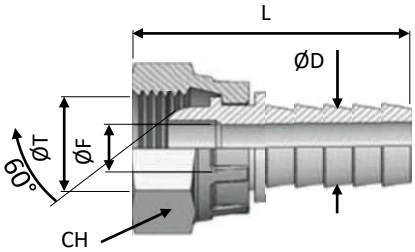

Codice-Code	CH	ØD tubo/hose	ØF	L	L1	L2	T	
PC2259-06-G018	-	6,3	1/4"	3,5	-	-	-	G1/8"	5
PC2259-06-G014	-	6,3	1/4"	5	-	-	-	G1/4"	5
PC2259-08-G014	-	8	5/16"	6	-	-	-	G1/4"	5
PC2259-10-G014	-	9,5	3/8"	7,5	-	-	-	G1/4"	5
PC2259-10-G038	-	9,5	3/8"	7,5	-	-	-	G3/8"	5
PC2259-13-G038	-	13	1/2"	9	-	-	-	G3/8"	5
PC2259-13-G012	-	13	1/2"	9	-	-	-	G1/2"	5
PC2259-16-G012	-	16	5/8"	11	-	-	-	G1/2"	5
PC2259-16-G034	-	16	5/8"	11	-	-	-	G3/4"	5
PC2259-19-G034	-	19	3/4"	13	-	-	-	G3/4"	5
PC2259-19-G100	-	19	3/4"	15	-	-	-	G1"	5

Raccordatura raccomandata – recommended clamping – p.140-141

PC2233 PORTAGOMMA IN ACCIAIO ZINCATO PROFILO EASY-LOCK FIL. FEMMINA BSPP GIREVOLE
GALVANIZED STEEL EASY-LOCK HOSE TAIL WITH SWIVEL BSPP FEMALE THREAD

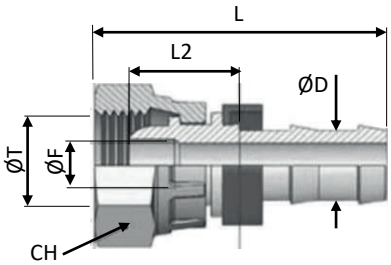

Codice-Code	CH	ØD tubo/hose	ØF	L	L1	L2	T	
PC2233-06-M014	19	6,3	1/8"	4	37,2	18	13,2	M14x1.5	5
PC2233-06-M016	20	9,5	3/8"	7	44,3	22	14,2	M16x1.5	5
PC2233-06-G014	19	6,3	1/8"	4	37,2	18	13,2	G1/4"	5
PC2233-10-M016	20	9,5	3/8"	7	44,3	22	14,2	M16x1.5	5
PC2233-10-M018	20	9,5	3/8"	7	44,3	22	14,2	M18x1.5	5
PC2233-10-G038	20	9,5	3/8"	7	44,3	22	14,2	G3/8"	5
PC2233-13-M022	27	13	1/2"	9,5	51,5	29	22,5	M22x1.5	5
PC2233-13-G012	27	13	1/2"	9,5	51,5	29	22,5	G1/2"	5
PC2233-16-M022	27	16	5/16"	15	68,2	39	22,5	M22x1.5	5
PC2233-16-M026	32	16	5/16"	15	68,2	39	27,6	M26x1.5	5
PC2233-19-M030	32	19	3/4"	15	68,2	39	27,6	M30x1,5	5
PC2233-19-G034	32	19	3/4"	15	68,2	39	27,6	G3/4"	5
PC2233-25-G100	41	25	1"	20	74	39	28,4	G1"	5

Promec FITTINGS

PH1001 PORTAGOMMA IN ACCIAIO ZINCATO PER TUBI ALTA PRESSIONE FIL. FEMMINA BSPP GIREVOLE
GALVANIZED STEEL HOSE TAIL WITH SWIVEL BSPP FEMALE THREAD FOR HIGH PRESSURE HOSES

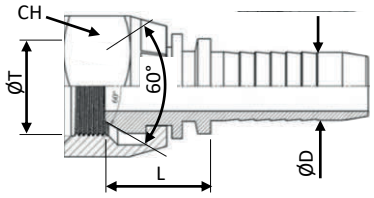

Codice-Code	CH	ØD tubo/hose	L	L1	ØT	max bar	
PH1001-014-M012	14	1/4"	15,5	-	M12x1,5	350	10
PH1001-014-M014	19	1/4"	15,5	-	M14x1,5	350	10
PH1001-014-M016	19	1/4"	17,5	-	M16x1,5	350	10
PH1001-014-G018	14	1/4"	15,5	-	G 1/8"	350	10
PH1001-014-G014	19	1/4"	15,5	-	G 1/4"	350	10
PH1001-014-G038	22	1/4"	17,5	-	G 3/8"	350	10
PH1001-038-M016	22	3/8"	18	-	M16x1,5	350	10
PH1001-038-M018	22	3/8"	18	-	M18x1,5	350	10
PH1001-038-M020	27	3/8"	19	-	M20x1,5	350	10
PH1001-038-G014	19	3/8"	16	-	G 1/4"	350	10
PH1001-038-G038	22	3/8"	18	-	G 3/8"	350	10
PH1001-038-G012	27	3/8"	19	-	G1/2"	315	10
PH1001-012-M018	22	1/2"	18	-	M18x1,5	315	5
PH1001-012-M022	27	1/2"	19	-	M22x1,5	315	5
PH1001-012-M026	32	1/2"	21,5	-	M26x1,5	315	5
PH1001-012-G038	27	1/2"	19	-	G 3/8"	315	5
PH1001-012-G012	22	1/2"	18	-	G1/2"	350	5
PH1001-012-G034	32	1/2"	21,5	-	3/4"	250	5
PH1001-034-M026	32	3/4"	22,5	-	M26x1,5	250	1
PH1001-034-G034	32	3/4"	22,5	-	3/4"	250	1
PH1001-034-G100	41	3/4"	23,5	-	1"	200	1
PH1001-100-G100	41	1"	24	-	1"	200	1

Raccordatura raccomandata – recommended clamping – p. 142, 143

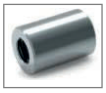

PH1001 PORTAGOMMA IN ACCIAIO INOX PER TUBI ALTA PRESSIONE FIL. FEMMINA BSPP GIREVOLE
STAINLESS STEEL HOSE TAIL WITH SWIVEL BSPP FEMALE THREAD FOR HIGH PRESSURE HOSES

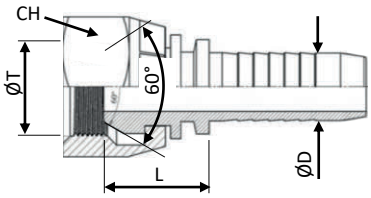

Codice-Code	CH	ØD tubo/hose	L	L1	ØT	max bar	
PH1001-014-M012-S	14	1/4"	15,5	-	M12x1,5	350	10
PH1001-014-M014-S	19	1/4"	15,5	-	M14x1,5	350	10
PH1001-014-M016-S	19	1/4"	17,5	-	M16x1,5	350	10
PH1001-014-G018-S	14	1/4"	15,5	-	G 1/8"	350	10
PH1001-014-G014-S	19	1/4"	15,5	-	G 1/4"	350	10
PH1001-014-G038-S	22	1/4"	17,5	-	G 3/8"	350	10
PH1001-038-M016-S	22	3/8"	18	-	M16x1,5	350	10
PH1001-038-M018-S	22	3/8"	18	-	M18x1,5	350	10
PH1001-038-M020-S	27	3/8"	19	-	M20x1,5	350	10
PH1001-038-G014-S	19	3/8"	16	-	G 1/4"	350	10
PH1001-038-G038-S	22	3/8"	18	-	G 3/8"	350	10
PH1001-038-G012-S	27	3/8"	19	-	G1/2"	315	10
PH1001-012-M018-S	22	1/2"	18	-	M18x1,5	315	5
PH1001-012-M022-S	27	1/2"	19	-	M22x1,5	315	5
PH1001-012-M026-S	32	1/2"	21,5	-	M26x1,5	315	5
PH1001-012-G038-S	27	1/2"	19	-	G 3/8"	315	5
PH1001-012-G012-S	22	1/2"	18	-	G1/2"	350	5
PH1001-012-G034-S	32	1/2"	21,5	-	3/4"	250	5
PH1001-034-M026-S	32	3/4"	22,5	-	M26x1,5	250	1
PH1001-034-G034-S	32	3/4"	22,5	-	3/4"	250	1
PH1001-034-G100-S	41	3/4"	23,5	-	1"	200	1
PH1001-100-G100-S	41	1"	24	-	1"	200	1

Raccordatura raccomandata – recommended clamping – p. 142, 143

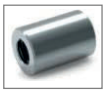

PH1002 PORTAGOMMA IN ACCIAIO ZINCATO 45° PER TUBI ALTA PRESSIONE FIL. FEMMINA BSPP GIREVOLE
GALVANIZED STEEL HOSE TAIL 45° WITH SWIVEL BSPP FEMALE THREAD FOR HIGH PRESSURE HOSES

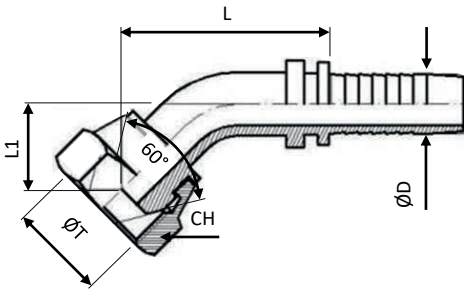

Codice-Code	CH	ØD tubo/hose	L	L1	max bar	ØT	
PH1002-014-M012	14	1/4"	37	13,5	350	M12x1,5	10
PH1002-014-M014	19	1/4"	37,5	14	350	M14x1,5	10
PH1002-014-M016	19	1/4"	40,5	17,5	350	M16x1,5	10
PH1002-014-G018	14	1/4"	37	13,5	350	G 1/8"	10
PH1002-014-G014	19	1/4"	37,5	14	350	G 1/4"	10
PH1002-014-G038	22	1/4"	40,5	17,5	350	G 3/8"	10
PH1002-038-M016	22	3/8"	51,5	19	350	M16x1,5	10
PH1002-038-M018	22	3/8"	51,5	19	350	M18x1,5	10
PH1002-038-M020	27	3/8"	53,5	21	350	M20x1,5	10
PH1002-038-G014	19	3/8"	50	17,5	350	G 1/4"	10
PH1002-038-G038	22	3/8"	51,5	19	350	G 3/8"	10
PH1002-038-G012	27	3/8"	53,5	21	315	G1/2"	10
PH1002-012-M018	22	1/2"	60,5	20,5	315	M18x1,5	5
PH1002-012-M022	27	1/2"	61	21	315	M22x1,5	5
PH1002-012-M026	32	1/2"	65,5	25,5	315	M26x1,5	5
PH1002-012-G038	22	1/2"	60,5	20,5	350	G 3/8"	5
PH1002-012-G012	27	1/2"	61	21	315	G1/2"	5
PH1002-012-G034	32	1/2"	65,5	25,5	250	3/4"	5
PH1002-034-M026	32	3/4"	81	26	250	M26x1,5	1
PH1002-034-G034	32	3/4"	81	26	250	3/4"	1
PH1002-034-G100	41	3/4"	83,5	28,5	200	1"	1
PH1002-100-G100	41	1"	99,5	29	200	1"	1

Raccordatura raccomandata – recommended clamping – p. 142, 143

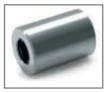

PH1002 PORTAGOMMA 45° IN ACCIAIO INOX PER TUBI ALTA PRESSIONE FIL. FEMMINA BSPP GIREVOLE
45° STAINLESS STEEL HOSE TAIL WITH SWIVEL BSPP FEMALE THREAD FOR HIGH PRESSURE HOSES

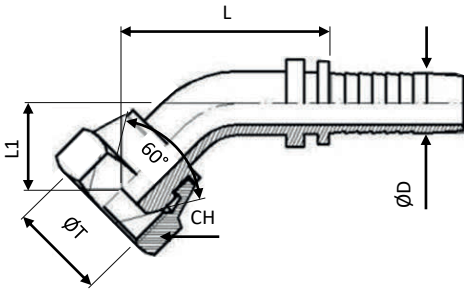

Codice-Code	CH	ØD tubo/hose	L	L1	max bar	ØT	
PH1002-014-M012-S	14	1/4"	37	13,5	350	M12x1,5	10
PH1002-014-M014-S	19	1/4"	37,5	14	350	M14x1,5	10
PH1002-014-M016-S	19	1/4"	40,5	17,5	350	M16x1,5	10
PH1002-014-G018-S	14	1/4"	37	13,5	350	G 1/8"	10
PH1002-014-G014-S	19	1/4"	37,5	14	350	G 1/4"	10
PH1002-014-G038-S	22	1/4"	40,5	17,5	350	G 3/8"	10
PH1002-038-M016-S	22	3/8"	51,5	19	350	M16x1,5	10
PH1002-038-M018-S	22	3/8"	51,5	19	350	M18x1,5	10
PH1002-038-M020-S	27	3/8"	53,5	21	350	M20x1,5	10
PH1002-038-G014-S	19	3/8"	50	17,5	350	G 1/4"	10
PH1002-038-G038-S	22	3/8"	51,5	19	350	G 3/8"	10
PH1002-038-G012-S	27	3/8"	53,5	21	315	G1/2"	10
PH1002-012-M018-S	22	1/2"	60,5	20,5	315	M18x1,5	5
PH1002-012-M022-S	27	1/2"	61	21	315	M22x1,5	5
PH1002-012-M026-S	32	1/2"	65,5	25,5	315	M26x1,5	5
PH1002-012-G038-S	22	1/2"	60,5	20,5	350	G 3/8"	5
PH1002-012-G012-S	27	1/2"	61	21	315	G1/2"	5
PH1002-012-G034-S	32	1/2"	65,5	25,5	250	3/4"	5
PH1002-034-M026-S	32	3/4"	81	26	250	M26x1,5	1
PH1002-034-G034-S	32	3/4"	81	26	250	3/4"	1
PH1002-034-G100-S	41	3/4"	83,5	28,5	200	1"	1
PH1002-100-G100-S	41	1"	99,5	29	200	1"	1

Raccordatura raccomandata – recommended clamping – p. 142, 143

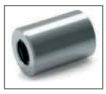

PC2234 PORTAGOMMA IN ACCIAIO ZINCATO 45° PROFILO EASY-LOCK FIL. FEMMINA BSPP GIREVOLE
GALVANIZED STEEL EASY-LOCK HOSE TAIL 45° WITH SWIVEL BSPP FEMALE THREAD

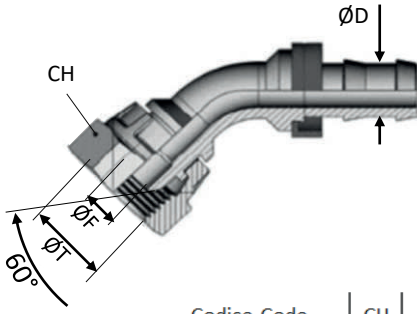

Codice-Code	CH	ØD tubo/hose		ØF	L	T	max bar	
PC2234-06-M014	19	6,3	1/8"	4	-	M14x1.5	-	5
PC2234-06-M016	20	9,5	3/8"	7	-	M16x1.5	-	5
PC2234-06-G014	19	6,3	1/4"	4	-	G1/4"	-	5
PC2234-10-M016	20	9,5	3/8"	7	-	M16x1.5	-	5
PC2234-10-M018	20	9,5	3/8"	7	-	M18x1.5	-	5
PC2234-10-G038	22	9,5	3/8"	7	-	G3/8"	-	5
PC2234-13-M022	27	12,7	1/2"	9,5	-	M22x1.5	-	5
PC2234-13-G012	27	12,7	1/2"	9,5	-	G1/2"	-	5
PC2234-16-M026	32	16	5/16"	14,5	-	M26x1.5	-	5
PC2234-19-G034	32	19,1	3/4"	14,5	-	G3/4"	-	5
PC2234-19-M030	32	19,1	3/4"	14,5	-	M30x1,5	-	5
PC2234-25-G100	46	25	1"	20	-	G1"	-	5

PC2248 RACCORDO IN OTTONE NICHELATO PORTAGOMMA 90° FILETTO MASCHIO BSPP ED O-RING NBR
NIKEL PLATED BRASS HOSE TAIL WITH 90° BSPP MALE THREAD WITH NBR O-RING

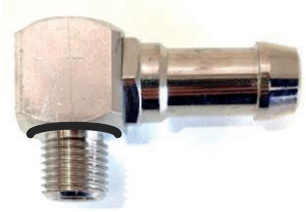

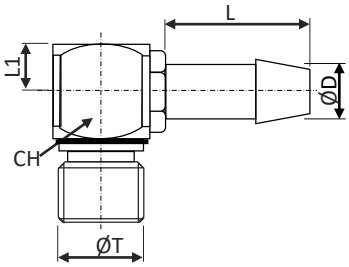

Codice-Code	CH	ØD tubo/hose		ØF	L	L1	T	
PC2248-08-G014	20	8		-	26	10	G1/4"	5
PC2248-10-G014	20	10	3/8"	-	28	10	G1/4"	5
PC2248-10-G038	20	10	3/8"	-	28	10	G3/8"	5
PC2248-12-G038	20	12		-	30	10	G3/8"	5
PC2248-13-G012	25	13	1/2"	-	32	12,5	G1/2"	1
PC2248-16-G012	25	15,9	5/8"	-	34	12,5	G1/2"	1

Raccordatura raccomandata – recommended clamping – p.140-141

PC2229 RACCORDO IN OTTONE PORTAGOMMA 90° FILETTO MASCHIO BSPT
BRASS HOSE TAIL WITH 90° BSP MALE THREAD

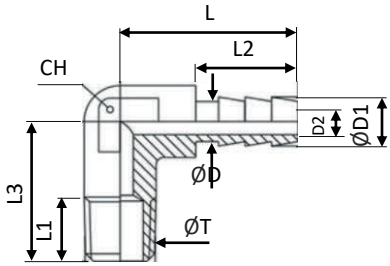

Codice-Code	CH	ØD tubo/hose		ØF	L	L1	L2	T	
PC2229-06-R018	8	6	1/4"	4	22,5	11	14	R1/8"	20
PC2229-06-R014	9	6	1/4"	4	23	11	14	R1/4"	20

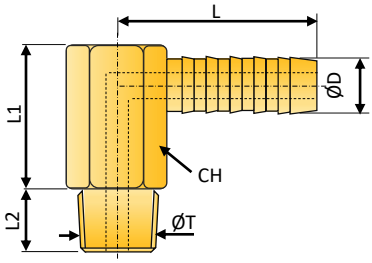

Codice-Code	CH	ØD tubo/hose		ØF	L	L1	L2	T	
PC2229-09-M008	11	9	3/8"	5	23	27	9	M8x0,75	10
PC2229-09-M010	11	9	3/8"	6	23	27	9	M10x1	10
PC2229-09-R018	11	9	3/8"	6	23	27	9	R1/8"	10
PC2229-13-M014	15	13	1/2"	11	32,5	34	12	M14x1,5	10
PC2229-13-R014	15	13	1/2"	10	32,5	34	12	R1/4"	10
PC2229-19-M024	24	19	3/4"	14	44	47	16	M24x1,5	5
PC2229-19-R012	22	19	3/4"	14	44	47	16	R1/2"	5

Raccordatura raccomandata – recommended clamping – p.140-141

PC2247 RACCORDO IN OTTONE NICHELATO EASY LOCK 90° FILETTO MASCHIO BSPP ED O-RING NBR
NIKEL PLATED BRASS EASY LOCK TAIL WITH 90° BSPP MALE THREAD WITH NBR O-RING

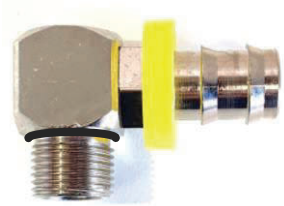

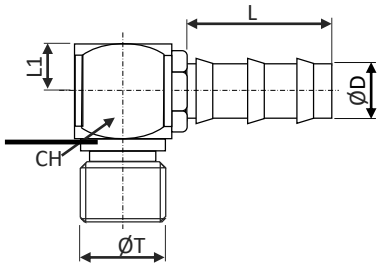

Codice-Code	CH	ØD tubo/hose		ØF	L	L1	L2	T	
PC2247-10-G014	20	10	3/8"	-	25	10	-	G1/4"	5
PC2247-10-G038	20	10	3/8"	-	25	10	-	G3/8"	5
PC2247-13-G038	20	13	1/2"	-	25	10	-	G3/8"	5
PC2247-13-G012	25	13	1/2"	-	32	13	-	G1/2"	1
PC2247-16-G012	25	16	5/8"	-	35	13	-	G1/2"	1

PH1003 PORTAGOMMA IN ACCIAIO ZINCATO 90° PER TUBI ALTA PRESSIONE FIL. FEMMINA BSPP GIREVOLE
GALVANIZED STEEL HOSE TAIL 90° WITH SWIVEL BSPP FEMALE THREAD FOR HIGH PRESSURE HOSES

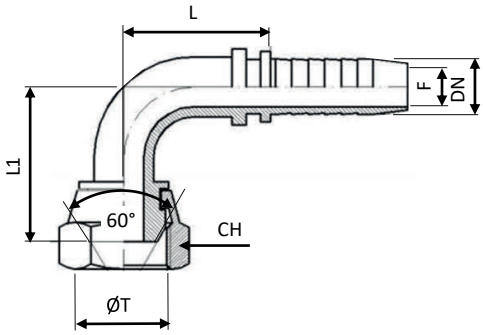

Raccordatura raccomandata – recommended clamping – p. 142, 143

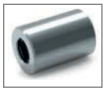

Codice-Code	CH	ØD tubo/hose		L	L1	ØT	max bar	
PH1003-014-M012	14	6,3	1/4"	21	26,5	M12x1,5	350	10
PH1003-014-M014	19	6,3	1/4"	21	26,5	M14x1,5	350	10
PH1003-014-M016	19	6,3	1/4"	21	30,5	M16x1,5	350	10
PH1003-014-G018	14	6,3	1/4"	21	26,5	G 1/8"	350	10
PH1003-014-G014	19	6,3	1/4"	21	26,5	G 1/4"	350	10
PH1003-014-G038	22	6,3	1/4"	21	30,5	G 3/8"	350	10
PH1003-038-M016	22	9,5	3/8"	29	36,5	M16x1,5	350	10
PH1003-038-M018	22	9,5	3/8"	29	36,5	M18x1,5	350	10
PH1003-038-M020	27	9,5	3/8"	29	39,5	M20x1,5	350	10
PH1003-038-G014	19	9,5	3/8"	29	34,5	G 1/4"	350	10
PH1003-038-G038	22	9,5	3/8"	29	36,5	G 3/8"	350	10
PH1003-038-G012	27	9,5	3/8"	29	39,5	G1/2"	315	10
PH1003-012-M018	22	12,7	1/2"	35,5	40,5	M18x1,5	315	10
PH1003-012-M022	27	12,7	1/2"	35,5	41,5	M22x1,5	315	10
PH1003-012-M026	32	12,7	1/2"	35,5	47,5	M26x1,5	315	10
PH1003-012-G038	22	12,7	1/2"	35,5	40,5	G 3/8"	350	5
PH1003-012-G012	27	12,7	1/2"	35,5	41,5	G1/2"	315	5
PH1003-012-G034	32	12,7	1/2"	35,5	47,5	3/4"	250	5
PH1001-034-M026	32	19	3/4"	49,5	52,5	M26x1,5	250	1
PH1003-034-G034	32	19	3/4"	49,5	52,5	3/4"	250	1
PH1003-034-G100	41	19	3/4"	50	56	1"	200	1
PH1003-100-G100	41	25	1"	63	62	1"	200	1

PH1003 PORTAGOMMA A 90° IN ACCIAIO INOX PER TUBI ALTA PRESSIONE FIL. FEMMINA BSPP GIREVOLE
90° STAINLESS STEEL HOSE TAIL WITH SWIVEL BSPP FEMALE THREAD FOR HIGH PRESSURE HOSES

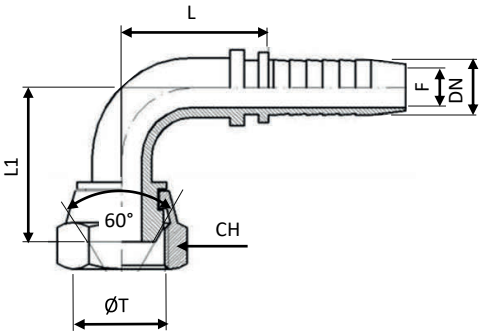

Raccordatura raccomandata – recommended clamping – p. 142, 143

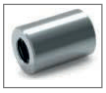

Codice-Code	CH	ØD tubo/hose		L	L1	ØT	max bar	
PH1003-014-M012-S	14	6,3	1/4"	21	26,5	M12x1,5	350	10
PH1003-014-M014-S	19	6,3	1/4"	21	26,5	M14x1,5	350	10
PH1003-014-M016-S	19	6,3	1/4"	21	30,5	M16x1,5	350	10
PH1003-014-G018-S	14	6,3	1/4"	21	26,5	G 1/8"	350	10
PH1003-014-G014-S	19	6,3	1/4"	21	26,5	G 1/4"	350	10
PH1003-014-G038-S	22	6,3	1/4"	21	30,5	G 3/8"	350	10
PH1003-038-M016-S	22	9,5	3/8"	29	36,5	M16x1,5	350	10
PH1003-038-M018-S	22	9,5	3/8"	29	36,5	M18x1,5	350	10
PH1003-038-M020-S	27	9,5	3/8"	29	39,5	M20x1,5	350	10
PH1003-038-G014-S	19	9,5	3/8"	29	34,5	G 1/4"	350	10
PH1003-038-G038-S	22	9,5	3/8"	29	36,5	G 3/8"	350	10
PH1003-038-G012-S	27	9,5	3/8"	29	39,5	G1/2"	315	10
PH1003-012-M018-S	22	12,7	1/2"	35,5	40,5	M18x1,5	315	10
PH1003-012-M022-S	27	12,7	1/2"	35,5	41,5	M22x1,5	315	10
PH1003-012-M026-S	32	12,7	1/2"	35,5	47,5	M26x1,5	315	10
PH1003-012-G038-S	22	12,7	1/2"	35,5	40,5	G 3/8"	350	5
PH1003-012-G012-S	27	12,7	1/2"	35,5	41,5	G1/2"	315	5
PH1003-012-G034-S	32	12,7	1/2"	35,5	47,5	3/4"	250	5
PH1001-034-M026-S	32	19	3/4"	49,5	52,5	M26x1,5	250	1
PH1003-034-G034-S	32	19	3/4"	49,5	52,5	3/4"	250	1
PH1003-034-G100-S	41	19	3/4"	50	56	1"	200	1
PH1003-100-G100-S	41	25	1"	63	62	1"	200	1

PC2261

PORTAGOMMA FIL. FEMMINA BSPP GIREVOLE 90° - ACCIAIO ZINCATO
SWIVEL BSPP FEMALE THREAD HOSE TAIL 90° - GALVANIZED STEEL

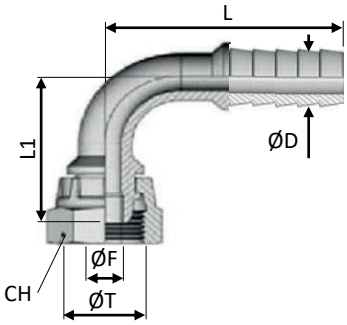

Codice-Code	CH	ØD tubo/hose		ØF	L	L1	T	max bar	
PC2261-06-G018	-	6,3	1/4"	5	-	-	G1/8"	25	5
PC2261-06-G014	-	6,3	1/4"	5	-	-	G1/4"	25	5
PC2261-08-G014	-	8	5/16"	6	-	-	G1/4"	25	5
PC2261-10-G014	19	9,5	3/8"	7,5	40	35	G1/4"	25	5
PC2261-10-G038	22	9,5	3/8"	7,5	50	43	G3/8"	25	5
PC2261-13-G038	22	12,7	1/2"	9	51	41	G3/8"	25	5
PC2261-13-G012	27	12,7	1/2"	9	55	43	G1/2"	20	5
PC2261-16-G012	-	16	5/8"	11	-	-	G1/2"	15	5
PC2261-19-G034	-	19	3/4"	13	-	-	G3/4"	15	5

Raccordatura raccomandata – recommended clamping – p.140-141

PC2235

PORTAGOMMA EASY-LOCK FIL. FEMMINA BSPP GIREVOLE 90° - ACCIAIO ZINCATO
SWIVEL BSPP FEMALE THREAD EASY-LOCK HOSE TAIL 90° - GALVANIZED STEEL

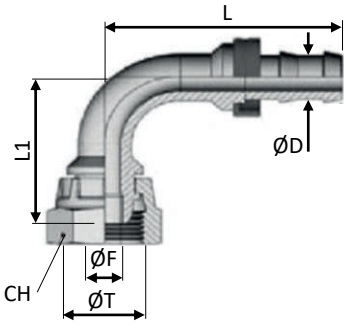

Codice-Code	CH	ØD tubo/hose		ØF	L	L1	T	max bar	
PC2235-06-M014	19	6,3	1/4"	4	19	25	M14x1.5	25	5
PC2235-06-M016	22	6,3	1/4"	4	19	-	M16x1.5	25	5
PC2235-06-G014	19	6,3	1/4"	4	19	25	G1/4"	25	5
PC2235-10-M016	20	9,5	3/8"	7	22	-	M16x1.5	25	5
PC2235-10-M018	20	9,5	3/8"	7	22	-	M18x1.5	25	5
PC2235-10-G038	22	9,5	3/8"	7	22	35	G3/8"	25	5
PC2235-13-M022	27	12,7	1/2"	9,5	27	42	M22x1.5	25	5
PC2235-13-G012	27	12,7	1/2"	9,5	27	42	G1/2"	25	5
PC2235-16-M026	32	16	5/16"	14,5	29	61	M26x1.5	25	5
PC2235-19-M030	32	19,1	3/4"	14,5	32	-	M30x1,5	25	5
PC2235-19-G034	32	19,1	3/4"	14,5	32	58	G3/4"	25	5
PC2235-25-G100	40	25	1"	20	40	-	G1"	20	5

PC2237 PORTAGOMMA OTTONE FILETTO MASCHIO BSPT PROLUNGATO
BRASS HOSE STEM TUBE WITH BSPT MALE THREAD

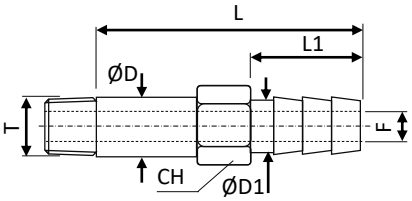

Codice-Code	CH	ØD	ØF	L	L1	T	max bar	
PC2237-09-R018-L038	11	9	6	38	-	R 1/8"	15	5
PC2237-09-R018-L060	11	9	6	60	-	R 1/8"	15	5
PC2237-09-R018-L080	11	9	6	80	-	R 1/8"	15	5
PC2237-09-R018-L100	11	9	6	100	-	R 1/8"	15	5
PC2237-09-R018-L120	11	9	6	120	-	R 1/8"	15	5
PC2237-09-R018-L150	11	9	6	150	-	R 1/8"	15	5
PC2237-13-R014-L038	15	13	9	38	-	R 1/4"	12	5
PC2237-13-R014-L060	15	13	9	60	-	R 1/4"	12	5
PC2237-13-R014-L080	15	13	9	80	-	R 1/4"	12	5
PC2237-13-R014-L100	15	13	9	100	-	R 1/4"	12	5
PC2237-13-R014-L120	15	13	9	120	-	R 1/4"	12	5
PC2237-13-R014-L150	15	13	9	150	-	R 1/4"	12	5

Raccordatura raccomandata – recommended clamping – p.140-141

PC2232 PROLUNGA LISCIA IN OTTONE CON PORTAGOMMA
BRASS SMOOTH EXTENSION WITH HOSE TAIL

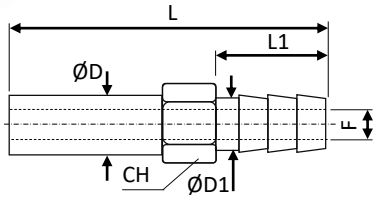

Codice-Code	CH	ØD	F	L	L1	L2	T	
PC2232-09-10-L120	11	10	-	120	25	-	-	4
PC2232-09-10-L240	11	10	-	240	25	-	-	1
PC2232-09-10-L360	11	10	-	360	25	-	-	1
PC2232-13-14-L150	15	10	-	150	33	-	-	4
PC2232-13-14-L300	15	14	-	300	33	-	-	1
PC2232-13-14-L450	15	14	-	450	33	-	-	1
PC2232-19-21-L500	22	19	-	500	38	-	-	1

Raccordatura raccomandata – recommended clamping – p.140-141

PC2263 PROLUNGA PORTAGOMMA ACCIAIO ZINCATO FILETTO MASCHIO BSPT
GALVANIZED EXTENSION WITH STEEL HOSE TAIL

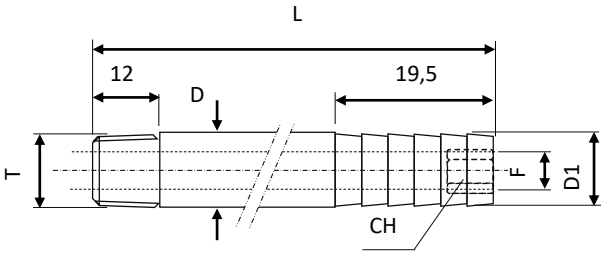

Codice-Code	CH	ØD	F	L	L1	L2	T	
PC2263-10-G018-L050	5	10	4,8	50	12	19,5	G 1/8"	1
PC2263-10-G018-L075	5	10	4,8	75	12	19,5	G 1/8"	1
PC2263-10-G018-L100	5	10	4,8	100	12	19,5	G 1/8"	1
PC2263-10-G018-L125	5	10	4,8	125	12	19,5	G 1/8"	1
PC2263-10-G018-L150	5	10	4,8	150	12	19,5	G 1/8"	1
PC2263-10-G018-L200	5	10	4,8	200	12	19,5	G 1/8"	1
PC2263-10-G018-L250	5	10	4,8	250	12	19,5	G 1/8"	1
PC2263-13-G014-L050	7	13	7	50	12	19,5	G 1/4"	1
PC2263-13-G014-L075	7	13	7	75	12	19,5	G 1/4"	1
PC2263-13-G014-L100	7	13	7	100	12	19,5	G 1/4"	1
PC2263-13-G014-L125	7	13	7	125	12	19,5	G 1/4"	1
PC2263-13-G014-L150	7	13	7	150	12	19,5	G 1/4"	1
PC2263-13-G014-L200	7	13	7	200	12	19,5	G 1/4"	1
PC2263-13-G014-L250	7	13	7	250	12	19,5	G 1/4"	1
PC2263-13-G014-L300	7	13	7	300	12	19,5	G 1/4"	1
PC2263-13-G014-L400	7	13	7	400	12	19,5	G 1/4"	1
PC2263-16-G038-L050	10	17	10	50	12	19,5	G 1/4"	1
PC2263-16-G038-L075	10	17	10	75	12	19,5	G 1/4"	1
PC2263-16-G038-L100	10	17	10	100	12	19,5	G 1/4"	1
PC2263-16-G038-L125	10	17	10	125	12	19,5	G 1/4"	1
PC2263-16-G038-L150	10	17	10	150	12	19,5	G 1/4"	1
PC2263-16-G038-L200	10	17	10	200	12	19,5	G 1/4"	1
PC2263-16-G038-L250	10	17	10	250	12	19,5	G 1/4"	1
PC2263-16-G038-L300	10	17	10	300	12	19,5	G 1/4"	1
PC2263-16-G038-L400	10	17	10	400	12	19,5	G 1/4"	1

Raccordatura raccomandata – recommended clamping – p.140-141

Promec FITTINGS

PC2255

VITE CAVA PER RACCORDO AD OCCHIELLO
BOLT FOR BANJO FITTING

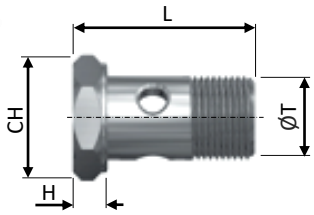

Codice-Code	CH	H	L	T	T1	
PC2255-G018	14	5	26	G1/8"	-	5
PC2255-G014	19	6	33	G1/4"	-	5
PC2255-G038	22	7	39	G3/8"	-	5
PC2255-G012	27	8	46	G1/2"	-	1
PC2255-G034	32	10	56	G3/4"	-	1
PC2255-G100	38	12	72	G1"	-	1

PC2257

RACCORDO AD OCCHIELLO CON PORTAGOMMA
BANJO FITTING WITH HOSE TAIL

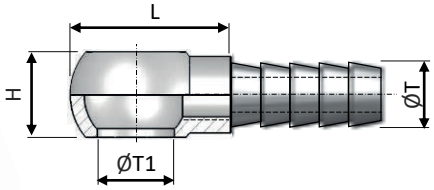

Codice-Code	ØF	H	L	T	T1	
PC2257-06-G014	-	10	25	6-	G1/4"	5
PC2257-10-G014	6	14	29	9,5-	G1/4"	5
PC2257-10-G038	6	20	35	9,5-	G3/8"	5
PC2257-13-G038	8	20	35	12,7-	G3/8"	5
PC2257-13-G012	8	22,5	37	12,7-	G1/2"	1
PC2257-16-G012	9,5	23	37	16-	G1/2"	1
PC2257-16-G034	9,5	30	53	16-	G3/4"	1
PC2257-19-G034	12	38	53	19-	G3/4"	1

PC2258

RACCORDO AD OCCHIELLO CON PORTAGOMMA EASYLOCK
BANJO FITTING WITH EASYLOCK HOSE TAIL

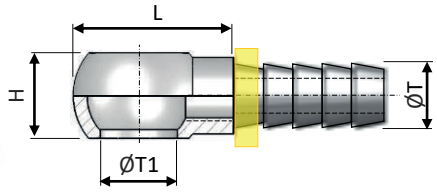

Codice-Code	ØF	H	L	T	T1	
PC2258-10-G018	6	20	-	9,5-	1/8"	5
PC2258-10-G014	6	20	25	9,5-	1/4"	5
PC2258-10-G038	6	20	35	9,5-	3/8"	5
PC2258-13-G038	8	20	35	12,7-	3/8"	5
PC2258-13-G012	8	20	37	12,7-	1/2"	5

PH1199

RONDELLA BONDED CON GUARNIZIONE
BONDED RING WITH SEAL

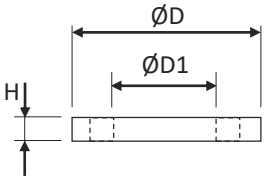

Codice-Code	misura size	ØD	ØD1	tipo O-Ring O-Ring type	H	
PH1199-018-N	1/8"	16	10,4	NBR	2	30
PH1199-018-V	1/8"	16	10,4	FKM	2	15
PH1199-014-N	1/4"	20,5	13,7	NBR	2	30
PH1199-014-V	1/4"	20,5	13,7	FKM	2	15
PH1199-038-N	3/8"	24	17,3	NBR	2	30
PH1199-038-V	3/8"	24	17,3	FKM	2	15
PH1199-012-N	1/2"	28,5	21,5	NBR	2,5	20
PH1199-012-V	1/2"	28,5	21,5	FKM	2,5	10
PH1199-034-N	3/4"	35	27	NBR	2,5	20
PH1199-034-V	3/4"	35	27	FKM	2,5	10
PH1199-100-N	1"	43	33,9	NBR	2,5	5
PH1199-100-V	1"	43	33,9	FKM	2,5	5
PH1199-114-N	1"1/4	52,5	42,9	NBR	2,5	20
PH1199-114-V	1"1/4	52,5	42,9	FKM	2,5	10
PH1199-112-N	1"1/2	58,5	48,4	NBR	2,5	5
PH1199-112-V	1"1/2	58,5	48,4	FKM	2,5	5

PH1198

RONDELLA RAME
COPPER SEAL

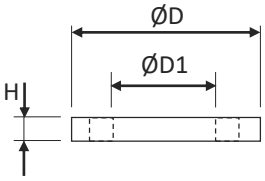

Codice-Code	misura size	ØD	ØD1	tipo O-Ring O-Ring type	H	
PH1198-018	1/8"	16	10	-	1,5	50
PH1198-014	1/4"	19	13,5	-	1,5	50
PH1198-038	3/8"	22	17	-	1,5	50
PH1198-012	1/2"	27	21,5	-	1,5	50
PH1198-034	3/4"	33	27	-	1,5	25
PH1198-100	1"	40	33,5	-	1,5	25
PH1198-114	1"1/4	50	42	-	1,5	10
PH1198-112	1"1/2	55	48	-	1,5	10

CODICI D'ASSIEME PER RACCORDO AD OCCHIELLO CON PORTAGOMMA E RONDELLE BONDED
ASSEMBLY CODES FOR BANJO FITTING WITH HOSE TAIL AND BONDED SEAL

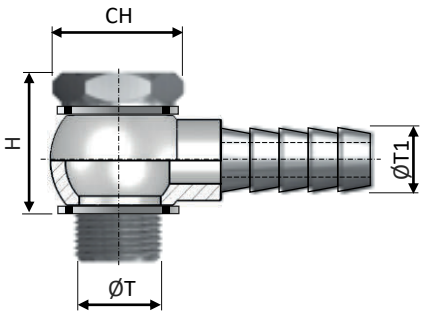

Codice-Code	CH	H	T	T1
PC2257A-06-G014-N	19	24	6-1/4"	G1/4"
PC2257A-06-G014-V				
PC2257A-10-G014-N			9,5-3/8"	
PC2257A-10-G014-V				
PC2257A-10-G038-N	22	29	9,5-3/8"	G3/8"
PC2257A-10-G038-V				
PC2257A-13-G038-N			12,7-1/2"	
PC2257A-13-G038-V				
PC2257A-13-G012-N	27	36	12,7-1/2"	G1/2"
PC2257A-13-G012-V				
PC2257A-16-G012-N			16-5/8"	
PC2257A-16-G012-V				
PC2257A-16-G034-N	32	45	16-5/8"	G3/4"
PC2257A-16-G034-V				
PC2257A-19-G034-N			19-3/4"	
PC2257A-19-G034-V				

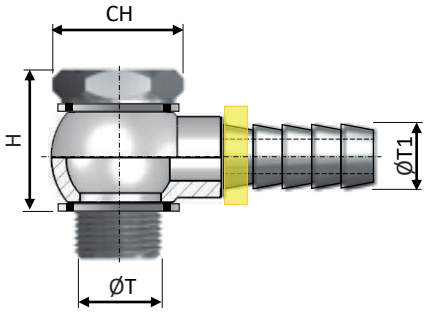

Codice-Code	CH	H	T	T1
PC2258A-10-G018-N	14	19	9,5-3/8"	1/8"
PC2258A-10-G018-V				
PC2258A-10-G014-N	19	24	9,5-3/8"	1/4"
PC2258A-10-G014-V				
PC2258A-10-G038-N	22	29	9,5-3/8"	3/8"
PC2258A-10-G038-V				
PC2258A-13-G038-N			12,7-1/2"	3/8"
PC2258A-13-G038-V				
PC2258A-13-G012-N	27	36	12,7-1/2"	1/2"
PC2258A-13-G012-V				

CODICI D'ASSIEME PER RACCORDO AD OCCHIELLO CON PORTAGOMMA E RONDELLE RAME
ASSEMBLY CODES FOR BANJO FITTING WITH HOSE TAIL AND COPPER SEAL

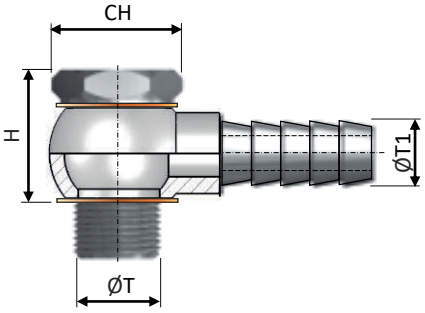

Codice-Code	CH	H	T	T1
PC2257A-06-G014-R	19	23	6-1/4"	G1/4"
PC2257A-10-G014-R			9,5-3/8"	
PC2257A-10-G038-R	22	28	9,5-3/8"	G3/8"
PC2257A-13-G038-R			12,7-1/2"	
PC2257A-13-G012-R	27	34	12,7-1/2"	G1/2"
PC2257A-16-G012-R			16-5/8"	
PC2257A-16-G034-R	32	43	16-5/8"	G3/4"
PC2257A-19-G034-R			19-3/4"	

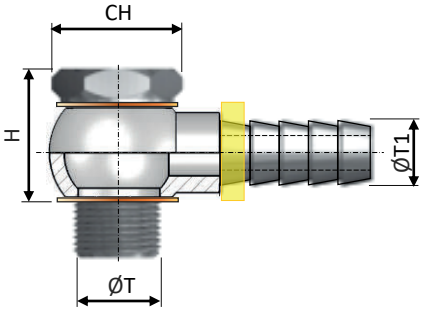

Codice-Code	CH	H	T	T1
PC2258A-10-G018-R	14	18	9,5-3/8"	1/8"
PC2258A-10-G014-R	19	23	9,5-3/8"	1/4"
PC2258A-10-G038-R	22	28	9,5-3/8"	3/8"
PC2258A-13-G038-R			12,7-1/2"	3/8"
PC2258A-13-G012-R	27	34	12,7-1/2"	1/2"

Promec FITTINGS

PC5102

FASCETTA STRINGITUBI ACCIAIO ZINCATO W1 DIN 3017
DIN 3017 GALVANIZED STEEL HOSE CLIP W1

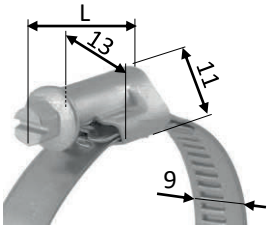

Codice-Code	Campo serraggio - Range mm	Campo serraggio - Range Inch	L	
PC5102-0812-W1	8-12	5/16-1/2	21	100
PC5102-1016-W1	10-16	5/16-5/8	21	100
PC5102-1222-W1	12-22	1/2-7/8	24	100
PC5102-1627-W1	16-27	5/8-1 1/16	24	100
PC5102-2032-W1	20-32	13/16-1 1/4	24	50
PC5102-2540-W1	25-40	1-1 9/16	26	50
PC5102-3045-W1	30-45	1 3/16-1	26	50
PC5102-3250-W1	32-50	1 3/8-2	26	50
PC5102-4060-W1	40-60	1 9/16-2	26	25
PC5102-5070-W1	50-70	2-2 3/4	26	25
PC5102-6080-W1	60-80	2 3/8-3 1/8	26	25
PC5102-7090-W1	70-90	3 3/8-3 1/8	26	25
PC5102-8001-W1	80-100	4 3/8-3 1/8	26	25

PC5104

FASCETTA STRINGITUBI ACCIAIO INOX DIN 3017 ALTE PRESTAZIONI W4
DIN 3017 STAINLESS STEEL HOSE CLIP W5 HIGH PERFORMANCES W4

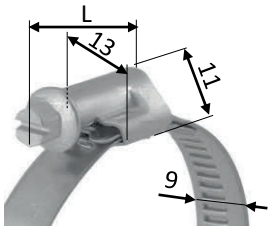

Codice-Code	Campo serraggio - Range mm	Campo serraggio - Range Inch	L	
PC5104-0816-W4	8-16	5/16-5/8	21	100
PC5104-1220-W4	12-20	1/2-7/8	24	100
PC5104-1627-W4	16-27	5/8-1 1/16	24	100
PC5104-2032-W4	20-32	13/16-1 1/4	24	100
PC5104-2540-W4	25-40	1-1 9/16	26	100
PC5104-3045-W4	30-45	1 3/16-1	26	50
PC5104-3250-W4	32-50	1 3/8-2	26	50
PC5104-4060-W4	40-60	1 9/16-2	26	50
PC5104-5070-W4	50-70	2-2 3/4	26	25
PC5104-6080-W4	60-80	2 3/8-3 1/8	26	25
PC5104-7090-W4	70-90	2 3/4-3	26	25
PC5104-8001-W4	80-100	3 1/8-3	26	25

PC5111

FASCETTA STRINGITUBI 9 MM. ACCIAIO INOX W3 CON FRIZIONE
STAINLESS STEEL HOSE CLIP 9 MM. W3 WITH SPRING RELEASE

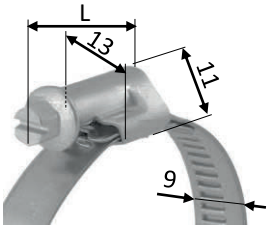

Codice-Code	Campo serraggio - Range mm	Campo serraggio - Range Inch	L	
PC5111-0816-W3	8-16	5/16-5/8	21	100
PC5111-1222-W3	12-22	1/2-7/8	24	100
PC5111-1627-W3	16-27	5/8-1 1/16	24	100
PC5111-2032-W3	20-32	13/16-1 1/4	24	100
PC5111-2540-W3	25-40	1-1 9/16	26	100
PC5111-3250-W3	32-50	1 3/16-1	26	50
PC5111-4060-W3	40-60	1 9/16-2	26	50
PC5111-5070-W3	50-70	2-2 3/4	26	25
PC5111-6080-W3	60-80	2 3/8-3 1/8	26	25
PC5111-7090-W3	70-90	2 3/4-3	26	25

PC5112

FASCETTA STRINGITUBI 12 MM. ACCIAIO INOX W3 CON FRIZIONE
STAINLESS STEEL HOSE CLIP 12 MM. W3 WITH SPRING RELEASE

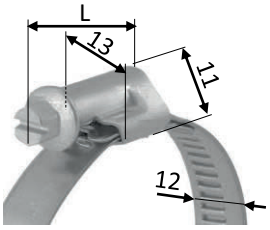

Codice-Code	Campo serraggio - Range mm	Campo serraggio - Range Inch	L	
PC5112-1627-W3	16-27	5/8-1 1/16	24	100
PC5112-2032-W3	20-32	13/16-1 1/4	24	100
PC5112-2540-W3	25-40	1-1 9/16	26	100
PC5112-3250-W3	32-50	1 3/16-1	26	50
PC5112-4060-W3	40-60	1 9/16-2	26	50
PC5112-5070-W3	50-70	2-2 3/4	26	25
PC5112-6080-W3	60-80	2 3/8-3 1/8	26	25
PC5112-7090-W3	70-90	2 3/4-3	26	25

PC5110

FASCETTA A DUE ORECCHIE ACCIAIO ZINCATO DIN 2393 C
DIN 2393 C GALVANIZED STEEL DOUBLE-HEAR CLIP

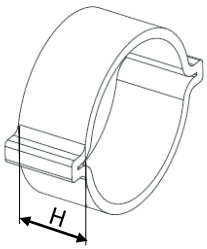

PC5902

Codice-Code	ØD	Range tubo Hose range	H	
PC5110-0507-Z	7.5	5-7	5,5	100
PC5110-0709-Z	9.5	7-9	6	100
PC5110-0911-Z	11.5	9-11	6	100
PC5110-1113-Z	13.5	11-13	6	100
PC5110-1315-Z	15.5	13-15	7	100
PC5110-1417-Z	17.5	14-17	7,5	100
PC5110-1518-Z	18.5	15-18	8	100
PC5110-1720-Z	20.5	17-20	8	100
PC5110-1921-Z	21.5	19-21	8	100
PC5110-2023-Z	23.5	20-23	9	100
PC5110-2225-Z	25.5	22-25	9	100
PC5110-2327-Z	27.5	23-27	9	100
PC5110-2528-Z	28.5	25-28	9	100
PC5110-2731-Z	31.5	27-31	9	100
PC5110-3134-Z	34.5	31-34	9	100
PC5110-3437-Z	37.5	34-37	9	100
PC5110-3740-Z	40.5	37-40	9	100
PC5110-4043-Z	43.5	40-43	9	100

PC5101

BOCCOLA A PRESSARE IN ACCIAIO ZONCATO PER TUBI BASSA PRESSIONE
GALVANIZED STEEL FERRULE FOR LOW PRESSURE HOSES

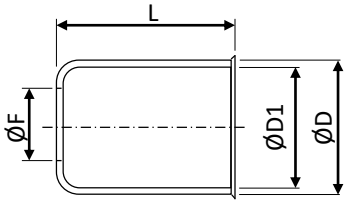

PC5910

Codice-Code	ØD	ØD1	F	L	
PC5101-125-Z	14	12,5	8,5	17	100
PC5101-135-Z	15,5	13,5	9,3	20	100
PC5101-145-Z	16,5	14,5	10	17	100
PC5101-160-Z	18	16	11,5	17	100
PC5101-180-Z	20	18	13,5	20	100
PC5101-190-Z	21	19	13,9	20	100
PC5101-195-Z	21,5	19,5	14,5	26	100
PC5101-210-Z	23	21	17	26	50
PC5101-220-Z	24	22	17	32	50
PC5101-230-Z	25	23	17	32	50
PC5101-250-Z	27	25	17	32	50
PC5101-280-Z	30	28	20,5	32	50
PC5101-305-Z	32,5	30,5	24,3	33	50
PC5101-330-Z	35	33	24,8	35	50
PC5101-338-Z	40	38	28	35	50
PC5101-410-Z	43	41	30	40	50

PC5121

BOCCOLA A PRESSARE IN ALLUMINIO PER TUBO BASSA PRESSIONE
ALLUMINIUM SWAGE FERRULE FOR LOW PRESSURE HOSES

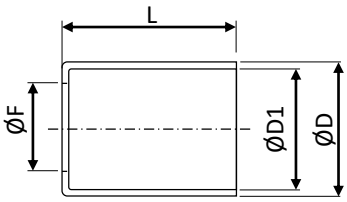

PC5910

Codice-Code	ØD	ØD1	F	L	
PC5121-140	16	14	-	-	100
PC5121-150	17	15	-	-	100
PC5121-160	18	16	-	-	100
PC5121-180	20	18	-	-	100
PC5121-190	21	19	-	-	100
PC5121-200	22	20	14.8	25	100
PC5121-210	23	21	-	-	50
PC5121-220	24	22	13.8	25	50
PC5121-230	25	23	-	-	50
PC5121-240	26	24	-	-	50
PC5121-260	28	26	18.8	30	50
PC5121-280	30	28	-	-	50
PC5121-300	32	30	-	-	50
PC5121-330	35	33	-	-	50
PC5121-340	36	34	-	-	50
PC5121-360	38	36	-	-	50
PC5121-380	40	38	-	-	50

PC4601

BOCCOLA A PRESSARE IN ACCIAIO ZINCATO PER TUBO PTFE PC4600
GALVANIZED STEEL SWAGE FERRULE FOR PTFE HOSE TYPE PC4600

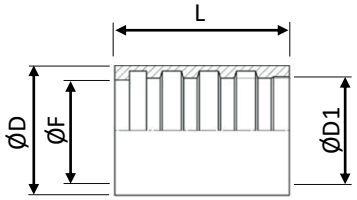

Codice-Code	DN	ØD	ØD1	ØF	L	Ø crimp	
PC4601-014	1/4"	15	11	10,7	30	13	10
PC4601-038	3/8"	18	14,5	14	32	15,5	10
PC4601-012	1/2"	24	19,3	18,6	32	20,5	10
PC4601-034	3/4"	30	24,9	24,4	43	27	8
PC4601-100	1"	36	30,3	30,3	50	34	6
PC4601-114	1"1/4	-	-	-	-	-	4
PC4601-112	1"1/2	-	-	-	-	-	4

PC4601

BOCCOLA A PRESSARE IN ACCIAIO INOX PER TUBO PTFE PC4600
STAINLESS STEEL SWAGE FERRULE FOR PTFE HOSE TYPE PC4600

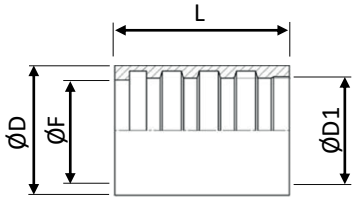

Codice-Code	DN	ØD	ØD1	ØF	L	Ø crimp	
PC4601-014-S	1/4"	15	11	10,7	30	13	10
PC4601-038-S	3/8"	18	14,5	14	32	15,5	10
PC4601-012-S	1/2"	24	19,3	18,6	32	20,5	10
PC4601-034-S	3/4"	30	24,9	24,4	43	27	8
PC4601-100-S	1"	36	30,3	30,3	50	34	6
PC4601-114-S	1"1/4	-	-	-	-	-	4
PC4601-112-S	1"1/2	-	-	-	-	-	4

PC4651

BOCCOLA A PRESSARE IN ACCIAIO ZINCATO PER TUBO PTFE PC4600
GALVANIZED STEEL SWAGE FERRULE FOR PTFE HOSE TYPE PC4600

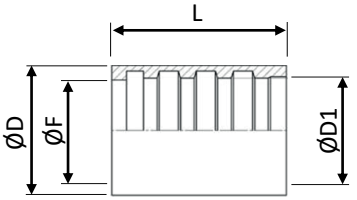

Codice-Code	DN	ØD	ØD1	ØF	L	Ø crimp	
PC4651-014	1/4"	16	12,5	11,2	30	12,2	10
PC4651-038	3/8"	21,5	17,8	15,5	30	16,8	10
PC4651-012	1/2"	25	21	18,6	33	20,2	10
PC4651-034	3/4"	32	28	25,2	40	26,7	8
PC4651-100	1"	40	34,8	33	50	34	6
PC4651-114	1"1/4	-	-	-	-	-	4
PC4651-112	1"1/2	-	-	-	-	-	4

PC4651

BOCCOLA A PRESSARE IN ACCIAIO INOX PER TUBO PTFE PC4600
STAINLESS STEEL SWAGE FERRULE FOR PTFE HOSE TYPE PC4600

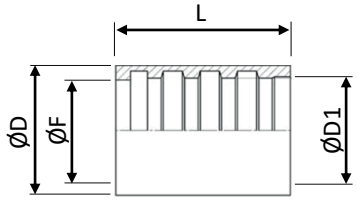

Codice-Code	DN	ØD	ØD1	ØF	L	Ø crimp	
PC4651-014-S	1/4"	16	12,5	11,2	30	12,2	10
PC4651-038-S	3/8"	21,5	17,8	15,5	30	16,8	10
PC4651-012-S	1/2"	25	21	18,6	33	20,2	10
PC4651-034-S	3/4"	32	28	25,2	40	26,7	8
PC4651-100-S	1"	40	34,8	33	50	34	6
PC4651-114-S	1"1/4	-	-	-	-	-	4
PC4651-112-S	1"1/2	-	-	-	-	-	4

PH1051

BOCCOLA A PRESSARE IN ACCIAIO ZINCATO PER TUBO OLEODINAMICO PH4100 E PH4150
GALVANIZED STEEL SWAGE FERRULE FOR HYDRAULIC HOSE TYPE PH4100 AND PH4150

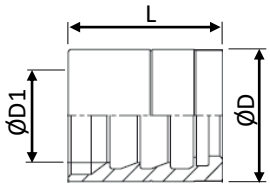

Codice-Code	DN	ØD	ØD1	L	
PH1051-G014-AZ	1/4"	22.5	15.5	25.5	10
PH1051-G038-AZ	3/8"	25	19.4	27	8
PH1051-G012-AZ	1/2"	28	22.6	29	6
PH1051-G034-AZ	3/4"	36	29.7	36	4
PH1051-G100-AZ	1"	45	38.3	44.5	4

PC4351

BOCCOLA A PRESSARE IN ACCIAIO ZINCATO PER TUBO PC4350
GALVANIZED STEEL SWAGE FERRULE FOR PC4350 HOSE

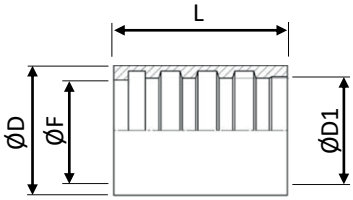

Codice-Code	DN	ØD	ØD1	L	
PC4351-038	3/8"	22	18.4	32	10
PC4351-012	1/2"	28.5	23.6	34	10
PC4351-034	3/4"	38	32.6	40	10
PC4351-100	1"	46	39.5	50	10

PC4701

BOCCOLA A PRESSARE IN ACCIAIO ZINCATO PER TUBO PC4700 E PC4750
GALVANIZED STEEL SWAGE FERRULE FOR PC4700 AND PC4750 HOSE

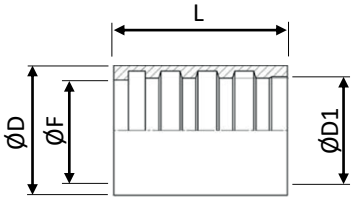

Codice-Code	DN	ØD	ØD1	L	
PC4701-038	3/8"	21	16.8	31	50
PC4701-012	1/2"	25.5	20.8	34	50
PC4701-034	3/4"	32	27.5	42	50
PC4701-100	1"	40	34.5	50	50
PC4701-114	1"1/4	-	-	-	-
PC4701-112	1"1/2	-	-	-	-

PC5910

ATTREZZATURA MANUALE PER RACCORDATURA BOCCOLE BASSA PRESSIONE PC5101 E PC5121
HAND-OPERATED CRIMPING TOOL FOR LOW PRESSURE FERRULE AS PC5101 AND 5121

Codice-Code	Range tubo Hose range
PC5910-028R	o.D. 10-22

PC5901

TAGLIATUBI IN ACCIAIO INOX
STAILESS STEEL HOSE CUTTER

Codice-Code	Range tubo Hose range
PC5901-012	0-12
PC5901-028	0-28

PC5901-012R	0-12
PC5901-028R	0-28

PC5902

UTENSILE PER SERRAGGIO FASCETTE PC5110
TOOL FOR PC5110 SETTING

PC5902

PC5801-050 50 ml
PC5801-250 250ml

SIGILLANTE LIQUIDO 180°C
LIQUID SEALANG 180°C

Adesivo anaerobico per metalli a leggera resistenza meccanica per sigillare raccordi idraulici e pneumatici fino a 3/4". Per la sigillatura di gas, acqua, GPL, idrocarburi, oli e svariati agenti chimici. E' omologato per gas a norma DIN-DVGW cert. Nr. NG-5146AU0038. E' SMONTABILE con normali utensili. Temperatura di esercizio da -55°C a +180°C. Altamente resistente a corrosione, urti e vibrazioni.

Anaerobic sealant for thread connections allowing easy dismantling of parts. DIN-DVGW approved for gas (Reg. nr. NG 5146AT0263). Upon curing will give an elastic film to replace yarn, PTFE tapes, and solid gaskets for the sealing of gas, air, water, LPG, oils, hydrocarbons and many chemicals. EASY TO DISMANTLE. Shocks and vibrations resistant, it will keep unaffected properties of sealing in the range of temperature from -55°C to +180°C.

PC5802-050 50 ml
PC5802-250 250ml

SIGILLANTE LIQUIDO 200°C
LIQUID SEALANG 200°C

Adesivo anaerobico per metalli a media resistenza per il bloccaggio di dadi e bulloni ed altre parti filettate che richiedono di essere smontati. Oleo-tollerante. Elevata resistenza a corrosione, vibrazioni, acqua, gas, oli e carburanti e molti agenti chimici. Mantiene inalterate le proprietà sigillanti nel campo di temperature tra –55°C e +200°C, fino a +250°C per brevi periodi, con comprovata resistenza allo svitamento alla temperatura di +200°C. Omologato come sigillante per raccordi filettati a tenuta gas DIN-DVGW norma Europea DIN EN 751.

Medium strength anaerobic adhesive for thread locking of nuts and bolts of all types that require to be dismantled. Suitable to be used on oily surfaces. Highly resistant to heat, corrosion, vibrations, water, gas, oils, hydrocarand many chemicals. Approved as gas-tight sealant for threaded fittings according to the European norm EN 751-1. Approved for potable water (TZW – DVGW). It keeps sealing properties unchanged between -55°C/+200°C and up to +250°C for short times.

PC5803-250 250ml

SIGILLANTE LIQUIDO 250°C
LIQUID SEALANG 250°C

Adesivo anaerobico specifico per ottone giallo ad elevata resistenza meccanica per sigillare e bloccare giunzioni filettate e fissare accoppiamenti cilindrici. Mantiene le proprietà sigillanti fino alla temperatura di +250°C. Dotato di alta resistenza a sbalzi termici, vibrazioni, agenti chimici ed invecchiamento. La sua alta viscosità consente una maggiore tolleranza di lavorazione.

Anaerobic adhesive specific for high mechanical strength on yellow brass, to seal threaded joints and to fix cylindrical couplings. It keeps sealing properties up to +250°C. It's highly resistant to thermal shocks, vibrations, chemical agents and aging. Its high viscosity allows a great handling tolerance.

PC2292 148

PC2293 149

PC2240 150

PC2241 151

PC2266

PC2268

PC2269 152

PC2294 153

PC2295 154

PC2244 155

PC2270 156

PC2273 157

Promec FITTINGS

PC2292

DEVIATORE INTERNO AD ESPANSIONE IN AISI 304 CON ANELLO DI TENUTA MECCANICA E O-RING FKM
AISI 304 THREADLESS DIVERTING PLUG WITH LOCKING RING AND FKM O-RING

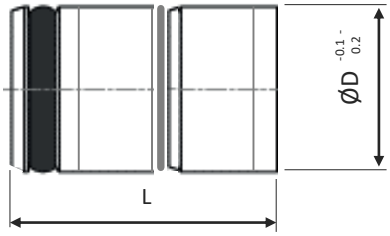

Codice-Code	ØD	L	max bar	
PC2292-08-S	8	15	15	25
PC2292-10-S	10	18,5		25
PC2292-11-S	11	18,5		20
PC2292-12-S	12	18,5		15
PC2292-15-S	15	20		10

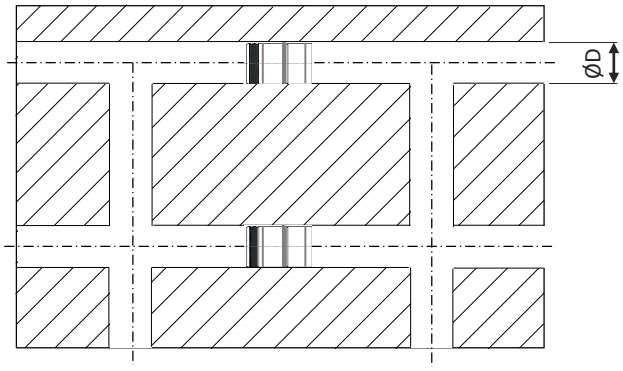

PC2293

TAPPO AD ESPANSIONE CON LAMA IN AISI 304 CON ANELLO DI TENUTA MECCANICA E O-RING FKM
AISI 304 THTREADLESS PLUG BUFFLE WITH LOCKING RING AND FKM O-RING

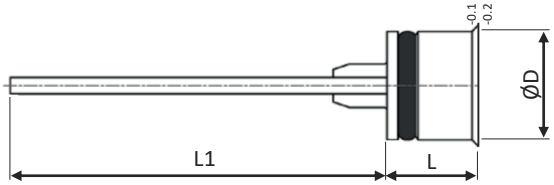

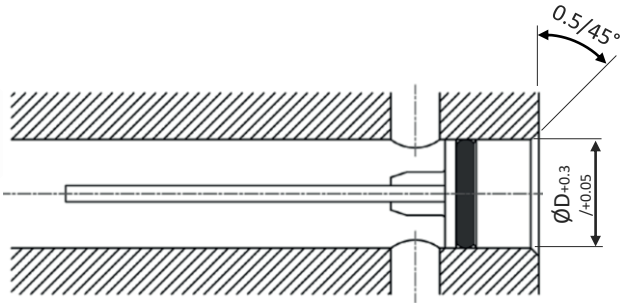

Codice-Code	ØD	L	L1	TORX	Codice Chiave Tool Code	Codice Torx Torx Code
PC2293-08-L150-S	8	≤9,5	150	T10	PC2290-08-CH	PC2290-TX10
PC2293-08-L200-S	8	≤9,5	200	T10	PC2290-08-CH	PC2290-TX10
PC2293-08-L300-S	8	≤9,5	300	T10	PC2290-08-CH	PC2290-TX10
PC2293-08-L400-S	8	≤9,5	400	T10	PC2290-08-CH	PC2290-TX10
PC2293-10-L150-S	10	≤10	150	T10	PC2290-10-CH	PC2290-TX10
PC2293-10-L200-S	10	≤10	200	T10	PC2290-10-CH	PC2290-TX10
PC2293-10-L300-S	10	≤10	300	T10	PC2290-10-CH	PC2290-TX10
PC2293-10-L400-S	10	≤10	400	T10	PC2290-10-CH	PC2290-TX10
PC2293-12-L150-S	12	≤11	150	T10	PC2290-12-CH	PC2290-TX10
PC2293-12-L200-S	12	≤11	200	T10	PC2290-12-CH	PC2290-TX10
PC2293-12-L300-S	12	≤11	300	T10	PC2290-12-CH	PC2290-TX10
PC2293-12-L400-S	12	≤12,5	400	T10	PC2290-12-CH	PC2290-TX10
PC2293-14-L150-S	14	≤12,5	150	T27	PC2290-14-CH	PC2290-TX27
PC2293-14-L200-S	14	≤12,5	200	T27	PC2290-14-CH	PC2290-TX27
PC2293-14-L300-S	14	≤12,5	300	T27	PC2290-14-CH	PC2290-TX27
PC2293-14-L400-S	14	≤12,5	400	T27	PC2290-14-CH	PC2290-TX27
PC2293-16-L150-S	16	≤12,5	150	T27	PC2290-16-CH	PC2290-TX27
PC2293-16-L200-S	16	≤12,5	200	T27	PC2290-16-CH	PC2290-TX27
PC2293-16-L300-S	16	≤12,5	300	T27	PC2290-16-CH	PC2290-TX27
PC2293-16-L400-S	16	≤12,5	400	T27	PC2290-16-CH	PC2290-TX27
PC2293-20-L150-S	20	≤13,5	150	T27	PC2290-20-CH	PC2290-TX27
PC2293-20-L200-S	20	≤13,5	200	T27	PC2290-20-CH	PC2290-TX27
PC2293-20-L300-S	20	≤13,5	300	T27	PC2290-20-CH	PC2290-TX27
PC2293-20-L400-S	20	≤13,5	400	T27	PC2290-20-CH	PC2290-TX27
PC2293-25-L150-S	25	≤13,5	150	T27	PC2290-25-CH	PC2290-TX27
PC2293-25-L200-S	25	≤13,5	200	T27	PC2290-25-CH	PC2290-TX27
PC2293-25-L300-S	25	≤13,5	300	T27	PC2290-25-CH	PC2290-TX27
PC2293-25-L400-S	25	≤13,5	400	T27	PC2290-25-CH	PC2290-TX27

PC2290-CH

CHIAVE PER INSTALLAZIONE PC2293
INSTALLATION TOOL FOR PC2293

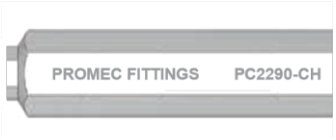

PC2290-TX

TORX PER PC2290-CH
TORX FOR PC2290-CH

Promec FITTINGS

PC2240

TAPPO OTTONE FILETTATO BSPP O METRICO CON LAMA
BSPP OR METRIC THREADED BRASS PLUG BAFFLE

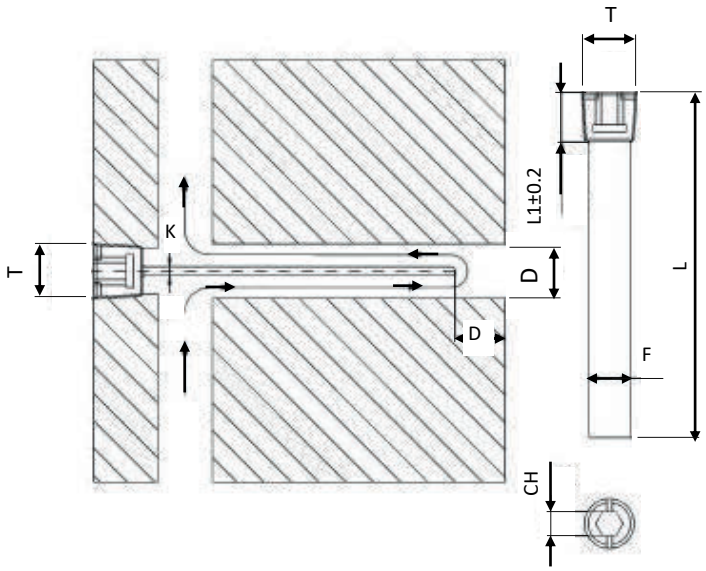

Codice-Code	CH	ØD	F	K	L	L1	T
PC2240-G018-L100	5	8.5	8.2	1.6	100	8	G 1/8"
PC2240-G018-L120	5	8.5	8.2	1.6	120	8	G 1/8"
PC2240-G018-L150	5	11.5	8.2	1.6	150	8	G 1/8"
PC2240-G018-L175	5	11.5	8.2	1.6	175	8	G 1/8"
PC2240-G018-L200	5	11.5	8.2	1.6	200	8	G 1/8"
PC2240-G014-L100	7	11.5	11.2	1.6	100	8	G 1/4"
PC2240-G014-L120	7	11.5	11.2	1.6	120	10	G 1/4"
PC2240-G014-L131	7	11.5	11.2	1.6	131	10	G 1/4"
PC2240-G014-L150	7	11.5	11.2	1.6	150	10	G 1/4"
PC2240-G014-L175	7	11.5	11.2	1.6	175	10	G 1/4"
PC2240-G014-L200	7	11.5	11.2	1.6	200	10	G 1/4"
PC2240-G014-L225	7	11.5	11.2	1.6	225	10	G 1/4"
PC2240-G014-L250	7	11.5	11.2	1.6	250	10	G 1/4"
PC2240-G038-L150	8	15	14.7	2.4	150	10	G 3/8"
PC2240-G038-L175	8	15	14.7	2.4	175	10	G 3/8"
PC2240-G038-L200	8	15	14.7	2.4	200	10	G 3/8"
PC2240-G038-L225	8	15	14.7	2.4	225	10	G 3/8"
PC2240-G038-L250	8	15	14.7	2.4	250	10	G 3/8"
PC2240-G038-L275	8	15	14.7	2.4	275	10	G 3/8"
PC2240-G038-L300	8	15	14.7	2.4	300	10	G 3/8"
PC2240-G012-L203	10	18.5	18.2	2.4	203	10	G 1/2"
PC2240-G012-L400	10	18.5	18.2	2.4	400	10	G 1/2"
PC2240-G034-L300	12	23.5	23.2	3.2	300	12	G 3/4"
PC2240-G034-L500	12	23.5	23.2	3.2	500	12	G 3/4"
PC2240-G100-L406	14	28.5	28.2	3.2	406	12	G 1"
PC2240-G100-L610	14	28.5	28.2	3.2	610	12	G 1"
PC2240-M008-L100	4	6	5.8	1.6	100	8	M8x0.75
PC2240-M008-L200	4	6	5.8	1.6	200	8	M8x0.75
PC2240-M010-L100	5	8	7.8	1.6	100	8	M10x1
PC2240-M010-L200	5	8	7.8	1.6	200	8	M10x1
PC2240-M012-L125	6	10	9.8	2	125	8	M12x1.5
PC2240-M012-L250	6	10	9.8	2	250	8	M12x1.5
PC2240-M016-L150	8	14	13.8	2.4	150	10	M16x1.5
PC2240-M016-L300	8	14	13.8	2.4	300	10	M16x1.5
PC2240-M020-L150	10	18	17.8	2.4	150	10	M20x1.5
PC2240-M020-L300	10	18	17.8	2.4	300	10	M20x1.5
PC2240-M024-L150	10	20	19.8	2.4	150	12	M24x1.5
PC2240-M024-L300	10	20	19.8	2.4	300	12	M24x1.5

PC2241

TAPPO OTTONE FILETTATO BSPP O METRICO CON LAMA ELICOIDALE
BSPP OR METRIC THREADED BRASS PLUG SPIRAL BAFFLE

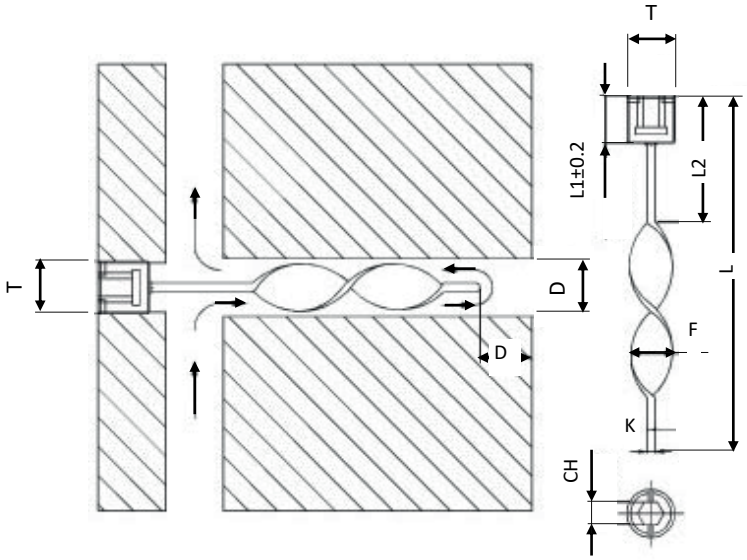

Codice-Code	CH	ØD	D1	K	L	L1	L2	T
PC2241-G018-L100	5	11.5	-	1.6	100	8	51	G 1/8"
PC2241-G018-L120	5	11.5	-	1.6	120	8	102	G 1/8"
PC2241-G018-L150	5	11.5	-	1.6	150	8	102	G 1/8"
PC2241-G018-L175	5	11.5	-	1.6	175	8	102	G 1/8"
PC2241-G018-L200	5	11.5	-	1.6	200	8	102	G 1/8"
PC2241-G014-L100	7	11.5	-	1.6	100	8	51	G 1/4"
PC2241-G014-L120	7	11.5	-	1.6	120	10	102	G 1/4"
PC2241-G014-L131	7	11.5	-	1.6	131	10	102	G 1/4"
PC2241-G014-L150	7	11.5	-	1.6	150	10	102	G 1/4"
PC2241-G014-L175	7	11.5	-	1.6	175	10	102	G 1/4"
PC2241-G014-L200	7	11.5	-	1.6	200	10	102	G 1/4"
PC2241-G014-L225	7	11.5	-	1.6	225	10	102	G 1/4"
PC2241-G014-L250	7	11.5	-	1.6	250	10	102	G 1/4"
PC2241-G038-L150	8	15	-	2.4	150	10	51	G 3/8"
PC2241-G038-L175	8	15		2.4	175	10	102	G 3/8"
PC2241-G038-L200	8	15	-	2.4	200	10	102	G 3/8"
PC2241-G038-L225	8	15	-	2.4	225	10	102	G 3/8"
PC2241-G038-L250	8	15	-	2.4	250	10	102	G 3/8"
PC2241-G038-L275	8	15	-	2.4	275	10	102	G 3/8"
PC2241-G038-L300	8	15	-	2.4	300	10	102	G 3/8"
PC2241-G012-L203	10	18.5	-	2.4	203	10	76	G 1/2"
PC2241-G012-L400	10	18.5	-	2.4	400	10	127	G 1/2"
PC2241-G034-L300	12	23.5	-	3.2	300	12	102	G 3/4"
PC2241-G034-L500	12	23.5	-	3.2	500	12	153	G 3/4"
PC2241-G100-L406	14	28.5	-	3.2	406	12	127	G 1"
PC2241-G100-L610	14	28.5	-	3.2	610	12	203	G 1"
PC2241-M008-L100	4	6	-	1.6	100	8	-	M8x0.75
PC2241-M008-L200	4	6	-	1.6	200	8	-	M8x0.75
PC2241-M010-L100	5	8	-	1.6	100	8	-	M10x1
PC2241-M010-L200	5	8	-	1.6	200	8	-	M10x1
PC2241-M012-L125	6	10	-	2	125	8	-	M12x1,5
PC2241-M012-L250	6	10	-	2	250	8	-	M12x1,5
PC2241-M016-L150	8	14	-	2.4	150	10	-	M16x1,5
PC2241-M016-L300	8	14	-	2.4	300	10	-	M16x1,5
PC2241-M020-L150	10	18	-	2.4	150	10	-	M20x1,5
PC2241-M020-L300	10	18	-	2.4	300	10	-	M20x1,5
PC2241-M024-L150	10	20	-	2.4	150	12	-	M24x1,5
PC2241-M024-L300	10	20	-	2.4	300	12	-	M24x1,5

PC2266

LAMA ACCIAIO INOX AUTO SERRANTE
STAINLESS STEEL SELF LOCKING BAFFLE

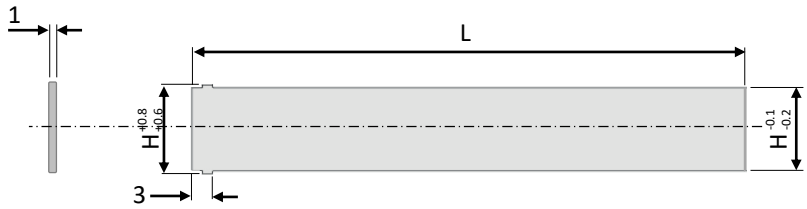

Codice-Code	H	L
PC2266-10-L500-S	10	500
PC2266-12-L200-S	12	200
PC2266-14-L200-S	14	200
PC2266-16-L150-S	16	150
PC2266-16-L300-S	16	300
PC2266-20-L300-S	20	300
PC2266-25-L300-S	25	300

PC2268

LAMA ACCIAIO INOX AUTO SERRANTE CON MOLLA
STAINLESS STEEL SELF LOCKING BAFFLE WITH SPRING

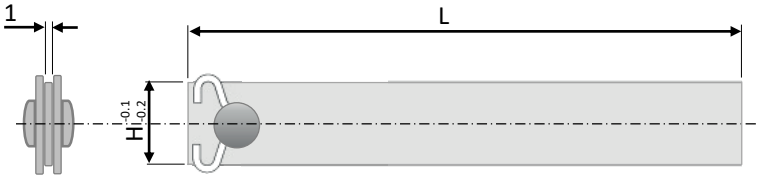

Codice-Code	H	L
PC2268-10-L200-S	10	200
PC2268-12-L200-S	12	200
PC2268-14-L200-S	14	200
PC2268-16-L300-S	16	300
PC2268-20-L400-S	20	400
PC2268-25-L600-S	25	600

PC2269

LAMA A SPIRALE ACCIAIO INOX AUTO SERRANTE
STAINLESS STEEL SELF LOCKING SPIRAL BAFFLE

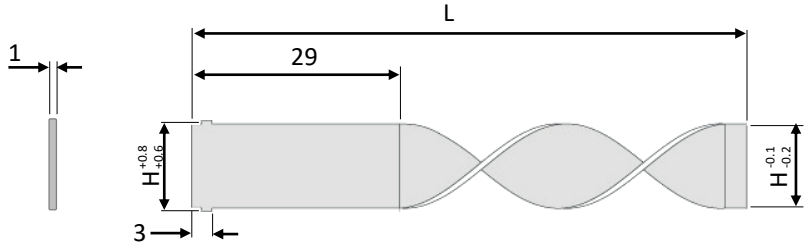

Codice-Code	H	L
PC2269-16-L450-S	16	450
PC2269-20-L300-S	20	300
PC2269-20-L450-S	20	450
PC2269-25-L300-S	25	300

PC2294

TAPPO A ESPANSIONE CON FONTANA IN PARALLELO AISI 304 CON ANELLO DI TENUTA MECCANICA E O-R FKM
AISI 304 THTREADLESS PARALLEL PLUG CASCADE WITH LOCKING RING AND FKM O-RING

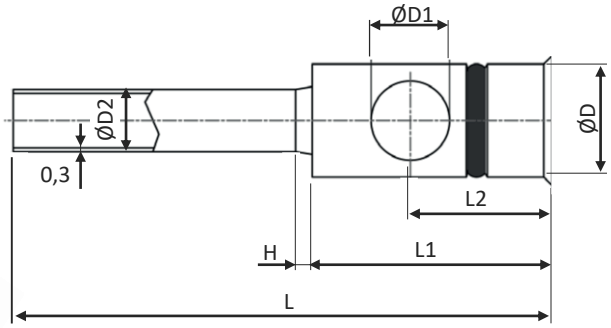

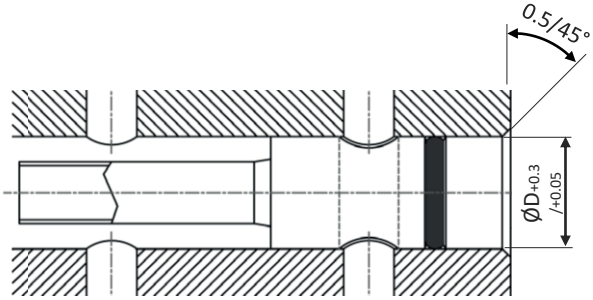

PC2290-CH

CHIAVE PER INSTALLAZIONE PC2294
INSTALLATION TOOL FOR PC2294

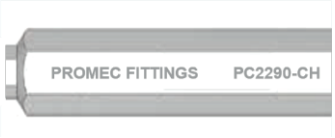

PC2290-TX

TORX PER PC2290-CH
TORX FOR PC2290-CH

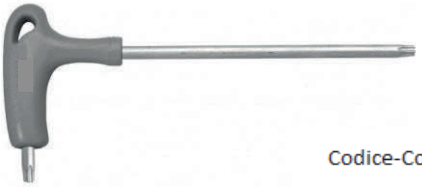

Codice-Code	ØD	ØD1	ØD2	H	L	L1	L2	TORX	Codice Chiave Tool Code	Codice Torx Torx Code
PC2294-08-L150-S	8	5	4,5	1,5	150	17	12,5	T10	PC2290-08-CH	PC2290-TX10
PC2294-08-L200-S	8	5	4,5	1,5	200	17	12,5	T10	PC2290-08-CH	PC2290-TX10
PC2294-08-L300-S	8	5	4,5	1,5	300	17	12,5	T10	PC2290-08-CH	PC2290-TX10
PC2294-08-L400-S	8	5	4,5	1,5	400	17	12,5	T10	PC2290-08-CH	PC2290-TX10
PC2294-10-L150-S	10	7	5	2	150	22	16	T10	PC2290-10-CH	PC2290-TX10
PC2294-10-L200-S	10	7	5	2	200	22	16	T10	PC2290-10-CH	PC2290-TX10
PC2294-10-L300-S	10	7	5	2	300	22	16	T10	PC2290-10-CH	PC2290-TX10
PC2294-10-L400-S	10	7	5	2	400	22	16	T10	PC2290-10-CH	PC2290-TX10
PC2294-12-L150-S	12	8	7	1,5	150	24,5	17	T10	PC2290-12-CH	PC2290-TX10
PC2294-12-L200-S	12	8	7	1,5	200	24,5	17	T10	PC2290-12-CH	PC2290-TX10
PC2294-12-L300-S	12	8	7	1,5	300	24,5	17	T10	PC2290-12-CH	PC2290-TX10
PC2294-12-L400-S	12	8	7	1,5	400	24,5	17	T10	PC2290-12-CH	PC2290-TX10
PC2294-14-L150-S	14	10	9	2	150	25,5	17,5	T27	PC2290-14-CH	PC2290-TX27
PC2294-14-L200-S	14	10	9	2	200	25,5	17,5	T27	PC2290-14-CH	PC2290-TX27
PC2294-14-L300-S	14	10	9	2	300	25,5	17,5	T27	PC2290-14-CH	PC2290-TX27
PC2294-14-L400-S	14	10	9	2	400	25,5	17,5	T27	PC2290-14-CH	PC2290-TX27
PC2294-16-L150-S	16	12	10	2	150	29	19	T27	PC2290-16-CH	PC2290-TX27
PC2294-16-L200-S	16	12	10	2	200	29	19	T27	PC2290-16-CH	PC2290-TX27
PC2294-16-L300-S	16	12	10	2	300	29	19	T27	PC2290-16-CH	PC2290-TX27
PC2294-16-L400-S	16	12	10	2	400	29	19	T27	PC2290-16-CH	PC2290-TX27
PC2294-20-L150-S	20	14	13	3	150	30,5	20,5	T27	PC2290-20-CH	PC2290-TX27
PC2294-20-L200-S	20	14	13	3	200	30,5	20,5	T27	PC2290-20-CH	PC2290-TX27
PC2294-20-L300-S	20	14	13	3	300	30,5	20,5	T27	PC2290-20-CH	PC2290-TX27
PC2294-20-L400-S	20	14	13	3	400	30,5	20,5	T27	PC2290-20-CH	PC2290-TX27
PC2294-25-L150-S	25	16	16	4,5	150	33	22	T27	PC2290-25-CH	PC2290-TX27
PC2294-25-L200-S	25	16	16	4,5	200	33	22	T27	PC2290-25-CH	PC2290-TX27
PC2294-25-L300-S	25	16	16	4,5	300	33	22	T27	PC2290-25-CH	PC2290-TX27
PC2294-25-L400-S	25	16	16	4,5	400	33	22	T27	PC2290-25-CH	PC2290-TX27

PC2295

TAPPO A ESPANSIONE CON FONTANA SEQUENZIALE IN AISI 304 CON ANELLO DI TENUTA MECCANICA E O-R FKM
AISI 304 THTREADLESS SEQUENCIAL PLUG CASCADE WITH LOCKING RING AND FKM O-RING

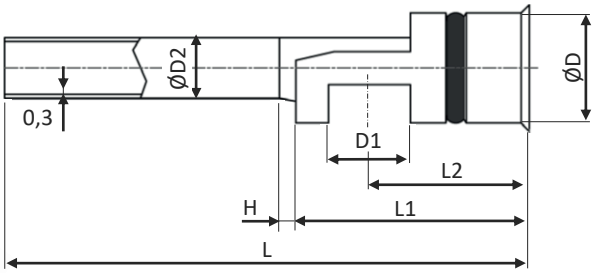

PC2290-CH

CHIAVE PER INSTALLAZIONE PC2295
INSTALLATION TOOL FOR PC2295

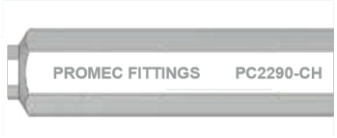

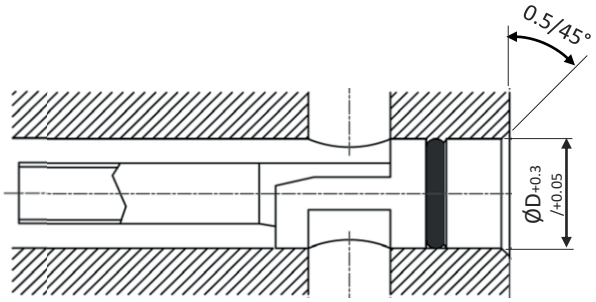

PC2290-TX

TORX PER PC2290-CH
TORX FOR PC2290-CH

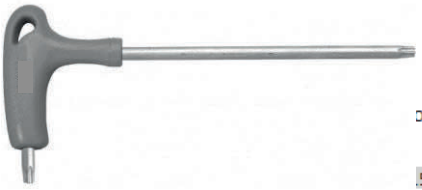

ode	ØD	D1	ØD2	H	L	L1	L2	TORX	Codice Chiave Tool Code	Codice Torx Torx Code
50-S	8	6	4,5	1,5	150	18	13	T10	PC2290-08-CH	PC2290-TX10
PC2295-08-L200-S	8	6	4,5	1,5	200	18	13	T10	PC2290-08-CH	PC2290-TX10
PC2295-08-L300-S	8	6	4,5	1,5	300	18	13	T10	PC2290-08-CH	PC2290-TX10
PC2295-08-L400-S	8	6	4,5	1,5	400	18	13	T10	PC2290-08-CH	PC2290-TX10
PC2295-10-L150-S	10	8	5	1,5	150	23	16	T10	PC2290-10-CH	PC2290-TX10
PC2295-10-L200-S	10	8	5	1,5	200	23	16	T10	PC2290-10-CH	PC2290-TX10
PC2295-10-L300-S	10	8	5	1,5	300	23	16	T10	PC2290-10-CH	PC2290-TX10
PC2295-10-L400-S	10	8	5	1,5	400	23	16	T10	PC2290-10-CH	PC2290-TX10
PC2295-12-L150-S	12	9	7	1,5	150	25,5	17,5	T10	PC2290-12-CH	PC2290-TX10
PC2295-12-L200-S	12	9	7	1,5	200	25,5	17,5	T10	PC2290-12-CH	PC2290-TX10
PC2295-12-L300-S	12	9	7	1,5	300	25,5	17,5	T10	PC2290-12-CH	PC2290-TX10
PC2295-12-L400-S	12	9	7	1,5	400	25,5	17,5	T10	PC2290-12-CH	PC2290-TX10
PC2295-14-L150-S	14	11,5	9	2,5	150	27	18	T27	PC2290-14-CH	PC2290-TX27
PC2295-14-L200-S	14	11,5	9	2,5	200	27	18	T27	PC2290-14-CH	PC2290-TX27
PC2295-14-L300-S	14	11,5	9	2,5	300	27	18	T27	PC2290-14-CH	PC2290-TX27
PC2295-14-L400-S	14	11,5	9	2,5	400	27	18	T27	PC2290-14-CH	PC2290-TX27
PC2295-16-L150-S	16	12,5	10	2	150	31	21,5	T27	PC2290-16-CH	PC2290-TX27
PC2295-16-L200-S	16	12,5	10	2	200	31	21,5	T27	PC2290-16-CH	PC2290-TX27
PC2295-16-L300-S	16	12,5	10	2	300	31	21,5	T27	PC2290-16-CH	PC2290-TX27
PC2295-16-L400-S	16	12,5	10	2	400	31	21,5	T27	PC2290-16-CH	PC2290-TX27
PC2295-20-L150-S	20	18	13	2	150	38,5	24	T27	PC2290-20-CH	PC2290-TX27
PC2295-20-L200-S	20	18	13	2	200	38,5	24	T27	PC2290-20-CH	PC2290-TX27
PC2295-20-L300-S	20	18	13	2	300	38,5	24	T27	PC2290-20-CH	PC2290-TX27
PC2295-20-L400-S	20	18	13	2	400	38,5	24	T27	PC2290-20-CH	PC2290-TX27
PC2295-25-L150-S	25	20	16	2	150	42	27	T27	PC2290-25-CH	PC2290-TX27
PC2295-25-L200-S	25	20	16	2	200	42	27	T27	PC2290-25-CH	PC2290-TX27
PC2295-25-L300-S	25	20	16	2	300	42	27	T27	PC2290-25-CH	PC2290-TX27
PC2295-25-L400-S	25	20	16	2	400	42	27	T27	PC2290-25-CH	PC2290-TX27

PC2244

RAFFREDDATORE A FONTANA IN OTTONE E ACCIAIO ZINCATO
BRASS AND GALVANIZED STEEL COOLING CASCADE

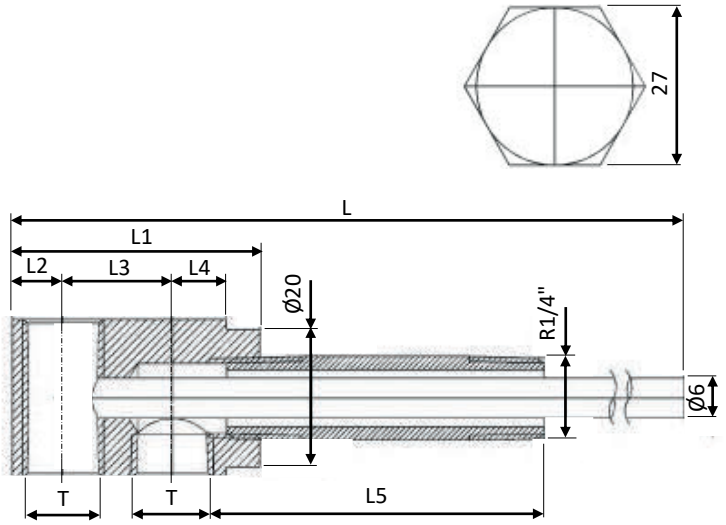

Codice-Code	L	L1	L2	L3	L4	L5	T
PC2244-19-G018-L050	356	42	9	19	9	50	G1/8"
PC2244-19-G018-L100	356	42	9	19	9	100	G1/8"
PC2244-19-G018-L150	356	42	9	19	9	150	G1/8"
PC2244-19-G018-L200	356	42	9	19	9	200	G1/8"
PC2244-26-G018-L050	362	54	9	26	12	50	G1/8"
PC2244-26-G018-L100	362	54	9	26	12	100	G1/8"
PC2244-26-G018-L150	362	54	9	26	12	150	G1/8"
PC2244-26-G018-L200	362	54	9	26	12	200	G1/8"
PC2244-19-G014-L050	356	42	9	19	9	50	G1/4"
PC2244-19-G014-L100	356	42	9	19	9	100	G1/4"
PC2244-19-G014-L150	356	42	9	19	9	150	G1/4"
PC2244-19-G014-L200	356	42	9	19	9	200	G1/4"
PC2244-26-G014-L050	362	54	9	26	12	50	G1/4"
PC2244-26-G014-L100	362	54	9	26	12	100	G1/4"
PC2244-26-G014-L150	362	54	9	26	12	150	G1/4"
PC2244-26-G014-L200	362	54	9	26	12	200	G1/4"

Promec FITTINGS

PC2270

RAFFREDDATORE A FONTANA
COOLING CASCADE

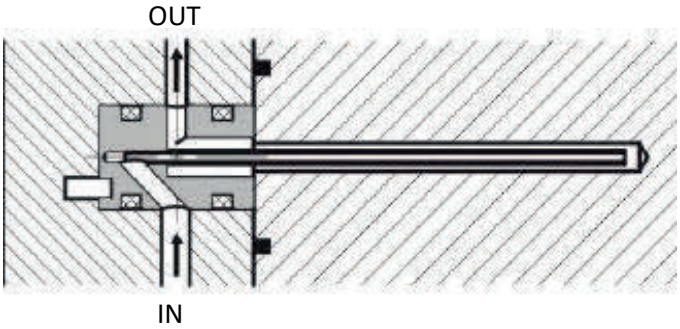

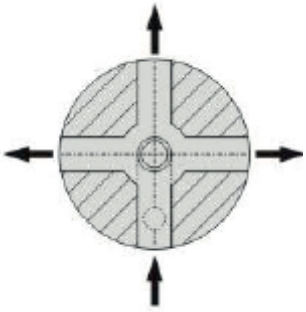

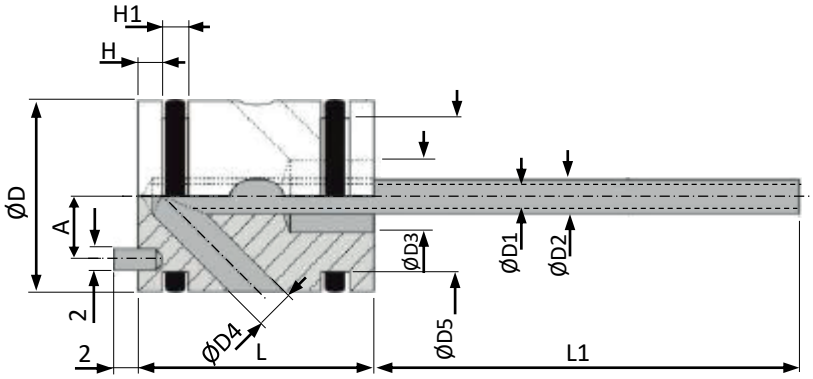

CARATTERISTICHE TECNICHE
Tubetto in acciaio nichelato
Corpo in ottone nichelato
O-Rings in NBR

TECHNICAL FEATURES
Nikel plated steel tube
Nikel plated brass body
NBR O-Rings

	A	D1	D	D2	D3	D4	D5	H	H1	L	L1
PC2270-10-008-150	3	0.8	10	1.3	4	2	7.15	2.1	2.2	150	15
PC2270-10-120-150	3	1,2	10	1.6	4	2	7.15	2.1	2.2	150	15
PC2270-10-180-150	3	1,8	10	2.4	4	2	7.15	2.1	2.2	150	15
PC2270-16-120-200	5.5	1.2	16	1.6	6	3	13	2.2	2.4	200	20
PC2270-16-180-200	5.5	1.8	16	2.4	6	3	13	2.2	2.4	200	20
PC2270-16-250-200	5.5	2.5	16	3.3	6	3	13	2.2	2.4	200	20
PC2270-25-320-200	9.8	3.2	25	4	12	7	22	3.2	2.4	200	30
PC2270-25-400-200	9.8	4	25	5	12	7	22	3.2	2.4	200	30
PC2270-25-500-200	9.8	5	25	6	12	7	22	3.2	2.4	200	30
PC2270-25-700-200	9.8	7	25	8	12	7	22	3.2	2.4	200	30

PC2273

DEVIATORE ESTERNO A PONTE
BRIDGE DIVERTING

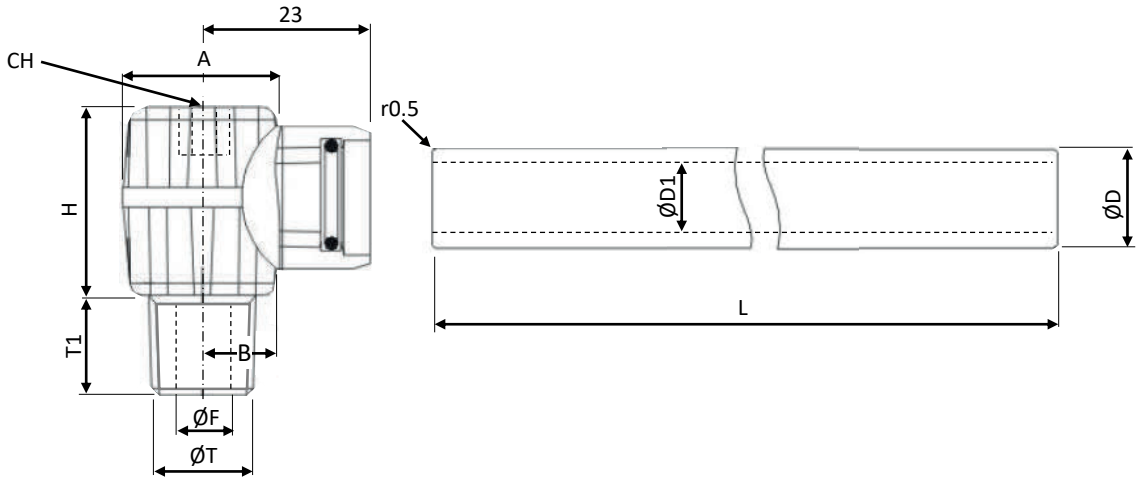

	A	B	CH	ØD	ØD1	H	ØF	L	ØT	T1
PC2273-08-G018-L300	21	8.7	6	8	6	26	5	300	G1/8"	9
PC2273-08-G018-L500	21	8.7	6	8	6	26	5	500	G1/8"	9
PC2273-08-G014-L300	21	8.7	6	8	6	26	6	300	G1/4"	9
PC2273-08-G014-L500	21	8.7	6	8	6	26	6	500	G1/4"	9
PC2273-12-G014-L300	25	11.2	8	12	10	30	9	300	G1/4"	9
PC2273-12-G014-L500	25	11.2	8	12	10	30	9	500	G1/4"	9
PC2273-12-G038-L300	25	11.2	8	12	10	30	9	300	G3/8"	9
PC2273-12-G038-L500	25	11.2	8	12	10	30	9	500	G3/8"	9

Ottone nichelato – nickel-plated brass

PC2101-2-3 **PC2104-5-6** **160**

Ottone nichelato – nickel-plated brass

PC2107-8-9 **PC2110-11-12** **161**

Ottone nichelato – nickel-plated brass

PC2113-14-15 **PC2116-17-18** **162**

Ottone nichelato – nickel-plated brass

PC2133-34 **163**

Acciaio Inox
Stainless Steel

PC2122

PC2123

PC2121 **164**

Alta pressione 2 e 3 vie
2 and 3 Gates, High Pressure

PH1310

PH1311 **165**

PH1343 **166**

PC2101

MINI VALVOLA A SFERA M/F FILETTO BSPP ISO228 IN OTTONE CROMATO. LEVA ALLUMINIO
MINI BRASS BALL VALVE M/F ISO228 BSPP THREAD, CHROME PLATED. ALUMINUM LEVER

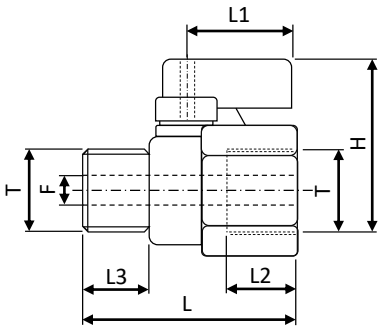

PC2102

PC2103

Codice-Code	ØT	L	L1	H	L2	L3	F	max bar	max temp	
PC2101-G014	1/4"BSPP									
PC2102-G014	1/4"BSPP	40		26	12	10	6			
PC2103-G014	1/4"BSPP									5
PC2101-G038	3/8"BSPP									
PC2102-G038	3/8"BSPP	41		27	12	10	8			
PC2103-G038	3/8"BSPP		23					16	120°C	
PC2101-G012	1/2"BSPP									
PC2102-G012	1/2"BSPP	44		31	12	11	10			
PC2103-G012	1/2"BSPP									1
PC2101-G034	3/4"BSPP									
PC2102-G034	3/4"BSPP	50		34	12	13	13			
PC2103-G034	3/4"BSPP									

PC2104

MINI VALVOLA A SFERA F/F FILETTO BSPP ISO228 IN OTTONE CROMATO. LEVA ALLUMINIO
MINI BRASS BALL VALVE F/F ISO228 BSPP THREAD, CHROME PLATED. ALUMINUM LEVER

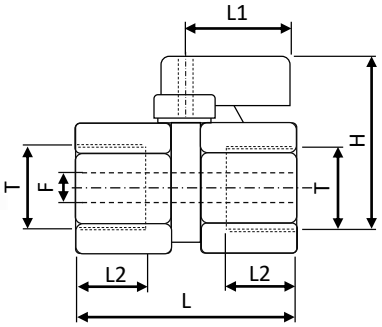

PC2105

PC2106

Codice-Code	ØT	L	L1	H	L2	L3	F	max bar	max temp	
PC2104-G014	1/4"BSPP									
PC2105-G014	1/4"BSPP	42		26		-	6			
PC2106-G014	1/4"BSPP									5
PC2104-G038	3/8"BSPP									
PC2105-G038	3/8"BSPP	42	23	27	12	-	8	16	120°C	
PC2106-G038	3/8"BSPP									
PC2104-G012	1/2"BSPP									
PC2105-G012	1/2"BSPP	45		31		-	10			1
PC2106-G012	1/2"BSPP									

PC2103-G018

MICRO VALVOLA A SFERA F/F FILETTO BSPP 1/8" ISO228 IN OTTONE CROMATO. LEVA IN PLASTICA
MINI BRASS BALL VALVE F/F ISO228 1/8" BSPP THREAD, CHROME PLATED. PLASTIC LEVER

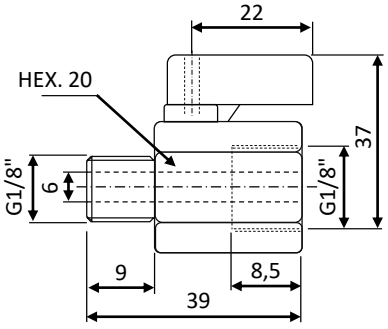

PC2107

VALVOLA A SFERA M/F FILETTO BSPP IN OTTONE NICHELATO. LEVA IN ACCIAIO
BRASS BALL VALVE M/F BSPP THREAD, NICKEL PLATED. STEEL LEVER

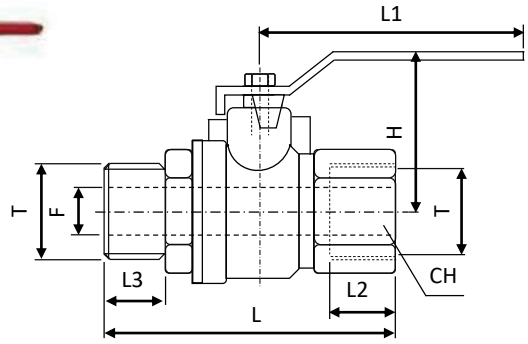

PC2108

PC2109

Codice-Code	CH	ØT	F	L	L1	H	L2	L3	max bar	max temp	
PC2107-G014											10
PC2108-G014	21	G1/4"	10	42	80	41	12	12			10
PC2109-G014											10
PC2107-G038											10
PC2108-G038	21	G3/8"	10	54	80	41	12	12			10
PC2109-G038											10
PC2107-G012											5
PC2108-G012	26	G1/2"	15	70	90	54	17	15			5
PC2109-G012											5
PC2107-G034									40	160°C	5
PC2108-G034	31	G3/4"	20	80	90	58	20	16			5
PC2109-G034											5
PC2107-G100											1
PC2108-G100	38	G1"	25	92	125	66	21	19			1
PC2109-G100											1
PC2107-G114											1
PC2108-G114	48	G1"1/4	32	102	125	71	22	21			1
PC2109-G114											1

PC2110

VALVOLA A SFERA F/F FILETTO BSPP IN OTTONE CROMATO. LEVA IN ACCIAIO
BRASS BALL VALVE F/F BSPP THREAD, CHROME PLATED. STEEL LEVER

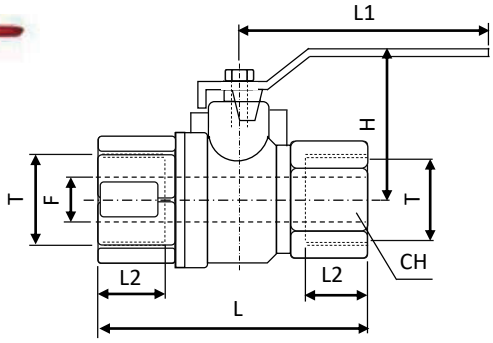

PC2111

PC2112

Codice-Code	CH	ØT	F	L	L1	H	L2	L3	max bar	max temp	
PC2110-G014											10
PC2111-G014	21	G1/4"	10	45	80	41	12	-			10
PC2112-G014											10
PC2110-G038											10
PC2111-G038	21	G3/8"	10	45	80	41	12	-			10
PC2112-G038											10
PC2110-G012											5
PC2111-G012	26	G1/2"	15	63	90	54	17	-			5
PC2112-G012											5
PC2110-G034									40	160°C	5
PC2111-G034	31	G3/4"	20	71	90	58	20	-			5
PC2112-G034											5
PC2110-G100											1
PC2111-G100	38	G1"	25	83	125	66	21	-			1
PC2112-G100											1
PC2110-G114											1
PC2111-G114	48	G1"1/4	32	92	125	71	22	-			1
PC2112-G114											1

PC2113

VALVOLA A SFERA M/F FILETTO BSPP IN OTTONE NICHELATO. LEVA A FARFALLA IN ALLUMINIO
BRASS BALL VALVE M/F BSPP THREAD, NICKEL PLATED. BUTTERFLY ALUMINUM HANDLE

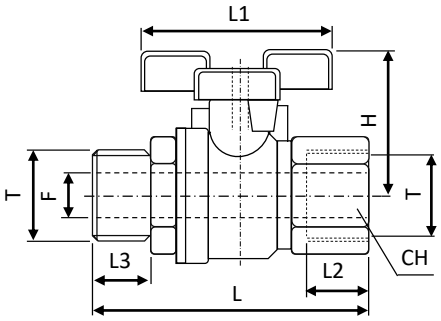

PC2114

PC2115

Codice-Code	CH	ØT	F	L	L1	H	L2	L3	max bar	max temp	
PC2113-G014											10
PC2114-G014	21	G1/4"	10	42	80	41	12	12			10
PC2115-G014											10
PC2113-G038											10
PC2114-G038	21	G3/8"	10	54	80	41	12	12			10
PC2115-G038											10
PC2113-G012											5
PC2114-G012	26	G1/2"	15	70	90	54	17	15	40	160°C	5
PC2115-G012											5
PC2113-G034											5
PC2114-G034	31	G3/4"	20	80	90	58	20	16			5
PC2115-G034											5
PC2113-G100											1
PC2114-G100	38	G1"	25	92	125	66	21	19			1
PC2115-G100											1

PC2116

VALVOLA A SFERA F/F FILETTO BSPP IN OTTONE CROMATO. LEVA A FARFALLA IN ALLUMINIO
BRASS BALL VALVE F/F BSPP THREAD, CHROME PLATED. BUTTERFLY ALUMINUM HANDLE

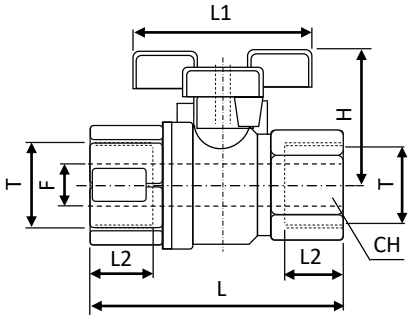

PC2117

PC2118

Codice-Code	CH	ØT	F	L	L1	H	L2	L3	max bar	max temp	
PC2116-G014											10
PC2117-G014	21	G1/4"	10	45	80	41	12	-			10
PC2118-G014											10
PC2116-G038											10
PC2117-G038	21	G3/8"	10	45	80	41	12	-			10
PC2118-G038											10
PC2116-G012											5
PC2117-G012	26	G1/2"	15	63	90	54	17	-	40	160°C	5
PC2118-G012											5
PC2116-G034											5
PC2117-G034	31	G3/4"	20	71	90	58	20	-			5
PC2118-G034											5
PC2116-G100											1
PC2117-G100	38	G1"	25	83	125	66	21	-			1
PC2118-G100											1

PC2133

VALVOLA A SFERA CON BOCCHETTONE MAX 110°C 25 BAR
BALL VALVE WITH SWIVEL FITTING MAX 110°C 25 BAR

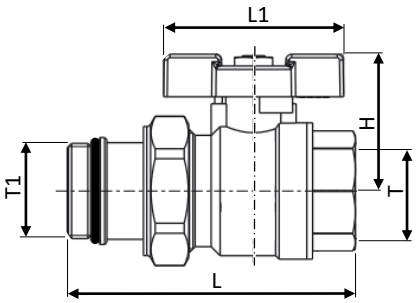

Codice-Code	T	T1
PC2133-G012	G 1/2"	G 1/2"
PC2133-G034	G 3/4"	G 3/4"
PC2133-G100	G 1"	G 1"
PC2134-G012	G 1/2"	G 1/2"
PC2134-G034	G 3/4"	G 3/4"
PC2134-G100	G 1"	G 1"

PC2134

PC2122

MINI VALVOLA A SFERA INOX – AISI 316 – M/F FILETTO BSPP
INOX – AISI 316 – MINI BALL VALVE M/F BSPP THREAD

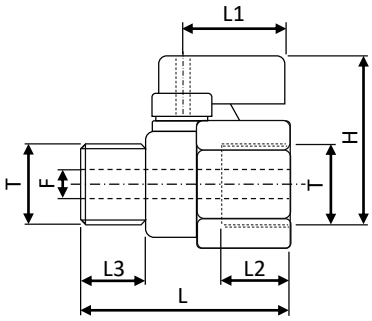

Codice-Code	CH	F	L	L1	H	L2	L3	ØT	max bar	max temp	
PC2122-G014	21	6	40	22	26	9	9	G1/4"	63	120°C	5
PC2122-G038	21	8	40	22	26	10	10	G3/8"			
PC2122-G012	26	10	46	22	28	11	11	G1/2"			

PC2123

MINI VALVOLA A SFERA INOX – AISI 316 – F/F FILETTO BSPP
INOX – AISI 316 – MINI BALL VALVE F/F BSPP THREAD

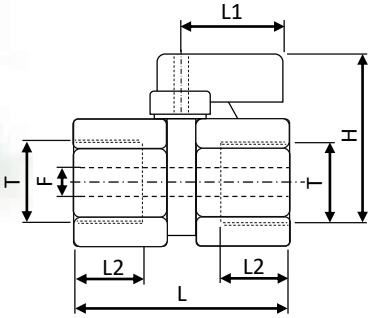

Codice-Code	CH	F	L	L1	H	L2	L3	ØT	max bar	max temp	
PC2123-G014	21	6	40	22	26	9	9	G1/4"	63	120°C	5
PC2123-G038	21	8	40	22	26	10	10	G3/8"			
PC2123-G012	26	10	46	22	28	11	11	G1/2"			

PC2121

VALVOLA A SFERA INOX – AISI 316 – F/F FILETTO BSPP
INOX – AISI 316 – BALL VALVE F/F BSPP THREAD

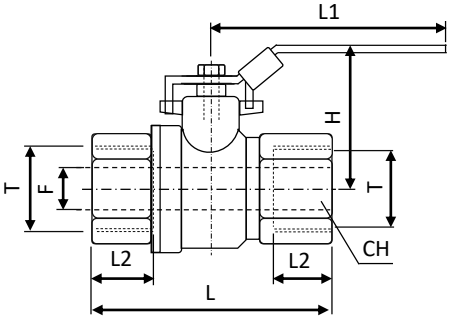

Codice-Code	CH	F	L	L1	H	L2	L3	ØT	max bar	max temp	
PC2121-G014	21	12	49	100	48	12	-	G1/4"	70	180°C	5
PC2121-G038	21	13	49	100	48	12	-	G3/8"			5
PC2121-G012	26	15	55	100	52	17	-	G1/2"			5
PC2121-G034	31	20	66	115	57	20	-	G3/4"			1
PC2121-G100	38	25	79	150	75	21	-	G1"			1
PC2121-G114	48	32	90	150	80	22	-	G1"1/4			1

PH1310

VALVOLA A SFERA ALTA PRESSIONE FILETTO BSPP FEMMINA
HIGH PRESSURE BALL VALVE BSPP FEMALE THREAD

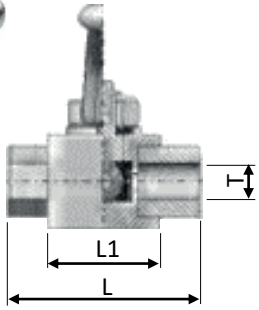

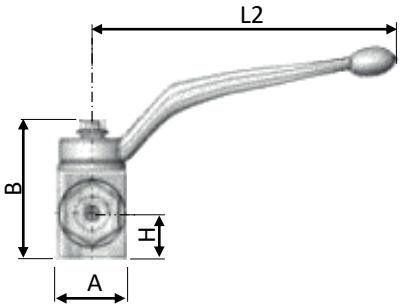

Codice-Code	A	B	F	H	L	L1	L2	T	max Bar
PH1310-G014	26	47	-	13.5	69	40	115	G1/4"	500
PH1310-G038	32	52	-	17.5	72	43	115	G3/8"	500
PH1310-G012	35	54	-	19	83	48	115	G1/2"	500
PH1310-G034	49	75	-	24.5	95	62	200	G3/4"	315

PH1311

VALVOLA A SFERA ALTA PRESSIONE A TRE VIE FILETTO BSPP FEMMINA
THREE WAYS HIGH PRESSURE BALL VALVE BSPP FEMALE THREAD

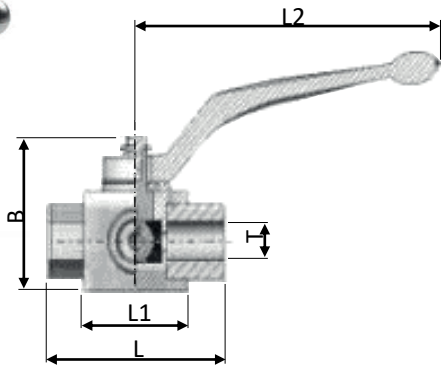

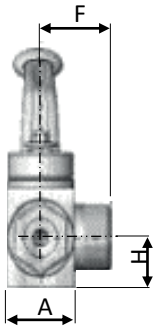

Codice-Code	A	B	F	H	L	L1	L2	T	max Bar
PH1311-G014	26	47	-	13.5	69	40	115	G1/4"	315
PH1311-G038	32	52	-	17.5	72	43	115	G3/8"	315
PH1311-G012	35	54	-	19	83	48	115	G1/2"	315
PH1311-G034	49	75	-	24.5	95	62	200	G3/4"	315

Promec FITTINGS

PH1343

VALVOLA DI RITEGNO AD APERTURA PILOTATA
PILOT-OPERATED CHECK VALVE

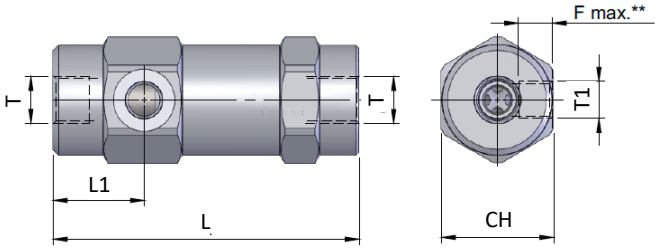

** Maximum fittings depth
** Profondità massima dei raccordi.

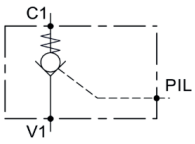

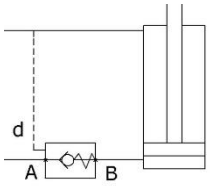

Codice-Code	CH	F max	L	L1	T	T1	max l/min	max Bar
PH1343-G014	36	12	103	30	G1/4"	G1/4"	15	400
PH1343-G038	40	12	109	33	G3/8"	G1/4"	30	400
PH1343-G012	42	12	122	36	G1/2"	G1/4"	50	400
PH1343-G034	55	14	131	40	G3/4"	G1/4"	80	400

KIT COMPLETO PER VALVOLA DI RITEGNO AD APERTURA PILOTATA
PILOT-OPERATED CHECK VALVE COMPLETE ASSEMBLY KIT

Per il funzionamento della valvola di ritegno è necessaria l'installazione di un minimo di componenti e tubi da aggiungere all'impianto esistente. In questa sezione proponiamo un kit da integrare ad un impianto tipo (ad esempio con la preesistenza di un tubo per la mandata ed uno per il ritorno) con un semplice configuratore per la definizione di un codice.
The installation of the pilot-operated check valve require the use of several extra hydraulic components, nipples and plugs. As to simplify this installation we provide a complete assembly-kit for short-stoke block cylinders, in two layout: side layout (sample 1) or back layout (sample 2). The overall dimensions can be defined by us by informing us about the Hydraulic cylinder Code (European Standards) or by suppling the cylinder oil port length and the hoses lenght (see drawing here below)

Esempio di codice ordine – Order code sample **PH1143-G014-350-B-0500**

Misura orifizi cilindro - Cylinder oil port size
G1/4" cod. **G014**
G3/8" cod. **G038**
G1/2" cod. **G012**

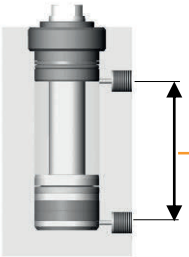

Interasse orifizi cilindro mm. (±10)
Cylinder oil port distance mm. (±10)
_ _ _

Cod. layout Laterale - Side layout code: **S**
Cod. layout Posteriore – Bottom layout code: **B**

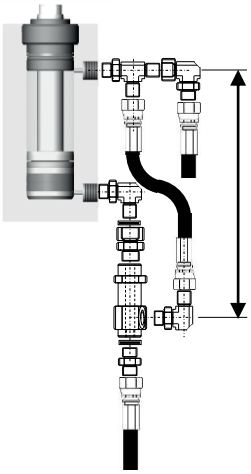

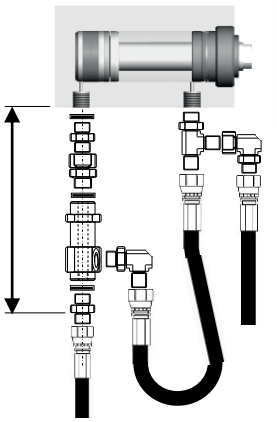

Ingombro totale kit (±50)
overall kit lenght mm. (±50)
_ _ _ _

Le immagini esposte sono solo esemplificative. Non corrispondono necessariamente alla reale consistenza di componenti.
The images are only as samples. They don't show precisely the type of components used in the application.

ARIA, ACQUA AIR, WATER	PVC 60°C	**PC4100**	PVC 60°C	**PC4150**	168
ARIA, ACQUA AIR, WATER	NBR 90°C	**PC4201**	NBR 100°C	**PC4202**	169
ARIA, ACQUA AIR, WATER	EPDM 120°C	**PC4250**	EPDM 203°C	**PC4350**	170
ARIA, ACQUA, VAPORE AIR, WATER, STEAM	SILICONE 180°C	**PC4800**	PU E-LOCK 80°C	**PC4500**	171
ACQUA, ARIA AIR, WATER	EPDM E-LOCK 100°C	**PC4400**	EPDM E-LOCK 125°C	**PC4450**	172
ARIA, ACQUA AIR, WATER	PU 60°C	**PA4200**	PA12 80°C	**PA4300**	173
ARIA, ACQUA AIR, WATER	PA12HT 130°C	**PA4250** 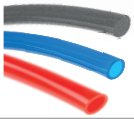	PTFE 260°C	**PA4400**	174
ACQUA-OLIO DIATERMICO WATER-DIATHERMIC OIL	PTFE 260°C	**PC4600**	PTFE 260°C CORRUGATO\ CONVOLUTED	**PC4650**	175
ARIA, ACQUA AIR, WATER	NBR 90°C	**PC4700**	EPDM 100°C	**PC4750** 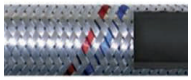	176
ABRASIVI - GRANULI GRANULES - ABRASIVES	ASPIRAZ. PU DUCTER PU	**PC4950**	ASPIRAZ. PU DUCTER PU	**PC4960**	177
ARIA, ACQUA , OLIO MINERALE AIR, WATER, MINERAL OIL	R1AT NBR 100°C	**PH4150**	R2AT NBR 100°C	**PH4100**	178
TUBI A MISURA CUSTOM HOSES	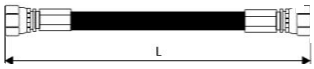	181- 185	GUAINE PROTEZIONE HOSE PROTECTIONS		179 180

PC4100

TUBO FLESSIBILE RETINATO IN PVC 60°C
PVC FLEXIBLE HOSE, REINFORCED, 60°C

PVC

Tubo flessibile in PVC con retinatura di rinforzo per aria compressa, acqua e liquidi vari. Prodotto economico ma con prestazioni limitate. Ideale principalmente per le misure e\o colori non disponibili con il tubo PC4201.
PVC flexible hose, reinforced, for compressed air and water applications. Lowest price but with low-tech features. To be considered especially when colour and\or size not available with PC4201.

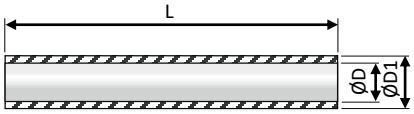

Raccordatura raccomandata – recommended clamping – p. 140-141

Codice-Code	D mm	D inch	D1	max W Bar x40°C	max B Bar x23°C	r min	L std. mt.	colore colour
PC4100-06-R-L100	6	1/4"	12	25	75	-	100	
PC4100-08-R-L100	8	5/16"	13	20	60	-	100	
PC4100-08-B-L100			14	40	120	-		
PC4100-08-N-L100						-		
PC4100-10-N-L100	10	3/8"	16	40	120	-	100	
PC4100-13-N-L100	13	1/2"	19	40	120	-	100	
PC4100-16-R-L050	16	5/8"	22	20	60	-	50	
PC4100-16-B-L025			23	25	75	-		
PC4100-16-N-L025						-		
PC4100-19-R-L050	19	3/4"	26	15	40	-	50	
PC4100-19-B-L050				20	60	-		
PC4100-19-N-L050						-		
PC4100-25-B-L050	25	1"	34	20	60	-	50	
PC4100-25-N-L050						-		
PC4100-32-B-L050	32	1"1/4	44	20	60	-	50	
PC4100-32-N-L050						-		

Per le misure 10 (3/8") e 13 (1/2") rosso e blu riferirsi al PC4201
For sizes 10 (3/8") e 13 (1/2"), red and blue, refer to PC4201

PC4150

TUBO FLESSIBILE RETINATO TRASPARENTE IN PVC 60°C
PVC FLEXIBLE TRANSPARENT HOSE, REINFORCED, 60°C

PVC

Tubo flessibile trasparente (su richiesta colorato-trasparente) in PVC con retinatura di rinforzo per aria compressa, acqua e liquidi vari.
Transparent PVC flexible hose, reinforced, for compressed air and water applications.

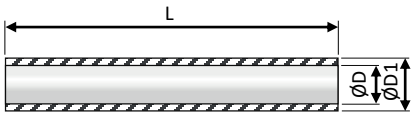

Raccordatura raccomandata – recommended clamping – p. 140-141

Codice-Code	ØD mm	ØD inch	ØD1	max W Bar x40°C	max B Bar x23°C	r min	L std. mt.	colore colour
PC4150-06-T-L050	6	1/4"	12	16	60	15	200	
PC4150-08-T-L050	8	5/16"	14	16	54	21	100	
PC4150-10-T-L050	10	3/8"	16	13	36	36	100	
PC4150-13-T-L050	13	1/2"	18	9	36	45	100	
PC4150-16-T-L050	16	5/8"	22	7	30	65	100	
PC4150-19-T-L025	19	3/4"	26	7	30	100	50	
PC4150-25-T-L025	25	1"	33	5	24	150	50	

PC4201

TUBO FLESSIBILE MULTICOLORE RETINATO IN NITRILE PER ACQUA 90°C
NITRILE FLEXIBLE HOSE, REINFORCED, FOR WATER APPLICATIONS 90°C

NBR

Tubo flessibile rosso o blu in Nitrile con retinatura di rinforzo per aria compressa, acqua e liquidi vari. IDEALE PER IL COLLEGAMENTO DEI CANALI DI CONDIZIONAMENTO SUGLI STAMPI INIEZIONE.
Nitrile flexible hose, reinforced, for compressed air and water applications. Red or blue. BEST FOR CONNECTING MOULD CHANNELS ON INJECTION MOULDS.

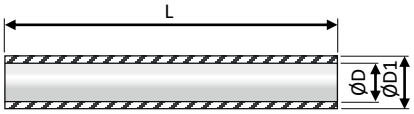

Raccordatura raccomandata – recommended clamping – p. 140-141

Codice-Code	ØD mm	ØD inch	ØD1	max W Bar x40°C	max B Bar x23°C	r min	L std. mt.	colore colour
PC4201-10-R-L050	10	3/8"	15	15	40	70	50	
PC4201-10-B-L050	10	3/8"	15	15	40	70	50	
PC4201-13-R-L100	13	1/2"	19	15	40	90	100	
PC4201-13-B-L100	13	1/2"	19	15	40	90	100	

PC4202

TUBO FLESSIBILE RINFORZATO SAE 100 R6 IN NITRILE PER ACQUA 100°C
SAE 100 R6 NITRILE FLEXIBLE REINFORCED HOSE, FOR WATER 100°C

NBR

Tubo flessibile Nitrile nero con retinatura di rinforzo per aria compressa, acqua e liquidi vari. Norma: SAE J517 100R6 EN 854. IDEALE PER IL COLLEGAMENTO DELLE PRESSE INIEZIONE AL CIRCUITO DI RETE grazie alla robustezza meccanica.
Nitrile flexible hose, reinforced, for compressed air and water applications. Black colour. Norm: SAE J517 100R6 EN 854. BEST FOR CONNECTING THE INJECTION MACHINE COOLING CIRCUIT TO THE FACTORY WATER CIRCUIT.

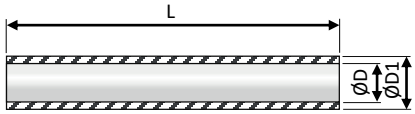

Raccordatura raccomandata – recommended clamping – p. 140-141

Codice-Code	ØD mm	ØD inch	ØD1	max W Bar x40°C	max B Bar x23°C	r min	L std. mt.	colore colour
PC4202-06-N-L001	6,3	1/4"	13.5	28	112	65	1	
PC4202-08-N-L001	8	5/16"	15.1	28	112	75	1	
PC4202-10-N-L001	10	3/8"	16.7	28	112	75	1	
PC4202-13-N-L001	13	1/2"	20.6	28	112	100	1	
PC4202-16-N-L001	16	5/8"	23.8	24	96	125	1	
PC4202-19-N-L001	19	3/4"	28.8	21	84	150	1	
PC4202-25-N-L001	25	1"	33.4	12	48	135	1	

PC4250

TUBO FLESSIBILE EPDM RETINATO PER PORTAGOMMA 120°C
EPDM FLEXIBLE REINFORCED HOSE 120°C

EPDM

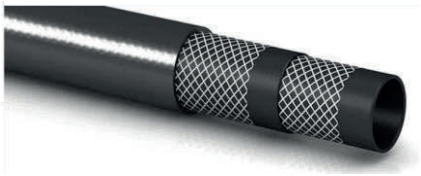

Tubo flessibile nero retinato in EPDM, per aria compressa, acqua e acqua-glicole.
EPDM Flexible hose, reinforced, for compressed air, water and water-glicol applications. Black colour.

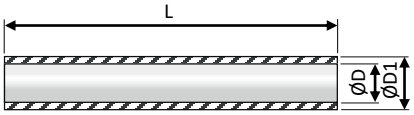

Codice-Code	ØD mm	ØD inch	ØD1	L std. mt.	max W Bar	max B Bar	r min	colore colou
PC4250-08-N-L040	6	1/4"	15	40	20	60	-	
PC4250-10-N-L040	10	3/8"	17	40	20	60	-	
PC4250-13-N-L040	13	1/2"	20	40	20	60	-	
PC4250-16-N-L040	16	5/8"	23	40	20	60	-	
PC4250-19-N-L040	19	3/4"	27	40	20	60	-	
PC4250-25-N-L040	25	1"	34	40	20	60	-	

Raccordatura raccomandata – recommended clamping – p. 140-141

PC4350

TUBO FLESSIBILE EPDM RETINATO ACCIAIO 203°C
EPDM FLEXIBLE REINFORCED HOSE 203°C

EPDM

Tubo flessibile colore rosso retinato in EPDM, per aria compressa, acqua e vapore. Norma ISO 1307
EPDM Flexible hose, reinforced, for compressed air, hot water and steam. ISO 1307 Norm.

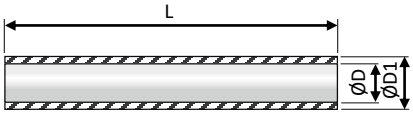

PC4351

BOCCOLA A PRESSARE IN ACCIAIO ZINCATO
GALVANIZED STEEL SWAGE FERRULE

Codice-Code	Codice-Code	ØD mm	ØD inch	ØD1	max W Bar	max B Bar	r min	L std. mt.	colore colour
PC4351-038	PC4350-10-R-L061	10	3/8"	21	17	170	-	61	
PC4351-012	PC4350-13-R-L061	13	1/2"	25	17	170	-	61	
PC4351-034	PC4350-19-R-L061	19	3/4"	32	17	170	-	61	
PC4351-100	PC4350-25-R-L061	25	1"	38	17	170	-	61	

PC4800

TUBO FLESSIBILE IN SILICONE CON TRECCIA INOX 200°C
SILICON FLEXIBLE HOSE WITH STAINLESS STEEL BRAID 200°C

SILICON

CARATTERISTICHE TECNICHE
Rivestimento trecciatura acciaio inox, per e acqua.
Temperatura max. di esercizio: +200°C

TECHNICAL FEATURES
Reinforced with Stainless steel wire braid, for water applications.
Max. working temperature +200°C

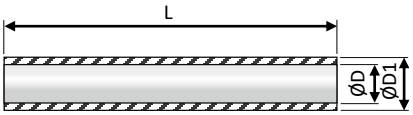

Codice-Code	ØD mm.	ØD inch	ØD1	max W Bar 23°C	max B Bar 23°C	r min	L std. mt.
PC4800-06-L001	6	1/4"	12	5	8	45	1
PC4800-10-L001	10	1/4"	17	5	8	55	1

Raccordatura raccomandata – recommended clamping – p. 140-141

PC4500

TUBO FLESSIBILE POLIURETANO RETINATO **EASY-LOCK** 80°C
POLYURETHANE FLEXIBLE REINFORCED **EASY-LOCK** HOSE 80°C

PU

Tubo flessibile multicolore retinato in Poliuretano, per e acqua e liquidi vari, con tecnologia Easy-Lock.
Polyurethane Flexible multicolour hose, reinforced, for water applications. Easy-Lock technology.

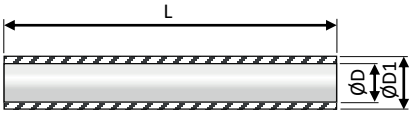

Codice-Code	ØD mm.	ØD inch	ØD1	max W Bar 23°C	max B Bar 23°C	r min	L std. mt.	colore colour
PC4500-06-B-L100	6,3	1/4"	12,5	25	95	25	100	
PC4500-06-N-L100	6,3	1/4"	12,5	25	95	25	100	
PC4500-06-R-L100	6,3	1/4"	12,5	25	95	25	100	
PC4500-10-B-L100	9,5	3/8"	16	20	80	50	100	
PC4500-10-N-L100	9,5	3/8"	16	20	80	50	100	
PC4500-10-R-L100	9,5	3/8"	16	20	80	50	100	
PC4500-13-B-L100	12,7	1/2"	19	20	80	75	100	
PC4500-13-N-L100	12,7	1/2"	19	20	80	75	100	
PC4500-13-R-L100	12,7	1/2"	19	20	80	75	100	
PC4500-16-B-L100	16	5/8"	23	17	60	120	50	
PC4500-16-N-L100	16	5/8"	23	17	60	120	50	
PC4500-16-R-L100	16	5/8"	23	17	60	120	50	
PC4500-19-B-L100	19,1	3/4"	27	17	60	150	50	
PC4500-19-N-L100	19,1	3/4"	27	17	60	150	50	
PC4500-19-R-L100	19,1	3/4"	27	17	60	150	50	

Raccordatura raccomandata – recommended clamping – Easylock

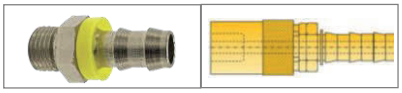

Promec FITTINGS

PC4400

TUBO FLESSIBILE EPDM RETINATO **EASY-LOCK** 100°C
EPDM FLEXIBLE REINFORCED **EASY-LOCK** HOSE 100°C

EPDM

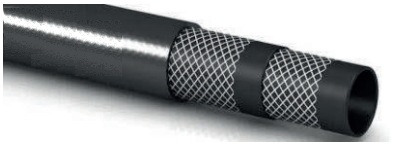

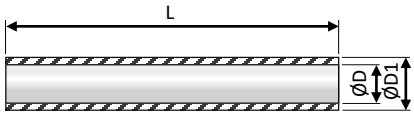

Tubo flessibile multicolore retinato in EPDM, per e acqua e liquidi vari, con tecnologia Easy-Lock.
EPDM Flexible multicolour hose, reinforced, for water applications. Easy-Lock technology.

CARATTERISTICHE TECNICHE
Pressione max. di esercizio: 16 Bar.
Range di temperatura di esercizio: -40 / +100°C
Normativa: ISO 1307

TECHNICAL FEATURES
Max. working pressure: 16 Bar.
Working temperature range: -40 / +100°C
Manufacturing norm: ISO 1307

Raccordatura raccomandata – tutti i profili Easy-lock e Pushlock®

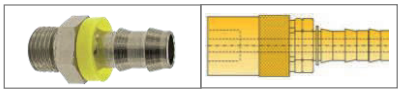

Codice-Code	D mm.	D inch	D1	max W Bar	max B Bar	r min	L std. mt.	colore colour
PC4400-06-N-L040	6.3	1/4"	12.8	16	40	45	40	
PC4400-10-N-L040	9.5	3/8"	13.5	16	40	75	40	
PC4400-13-N-L040	12.7	1/2"	16.6	16	40	90	40	
PC4400-19-N-L040	19.3	3/4"	24	16	40	135	40	
PC4400-25-N-L040	25.6	1"	30.5	16	40	165	40	

PC4450

TUBO FLESSIBILE EPDM RETINATO **EASY-LOCK** 125°C
EPDM FLEXIBLE REINFORCED **EASY-LOCK** HOSE 125°C

EPDM

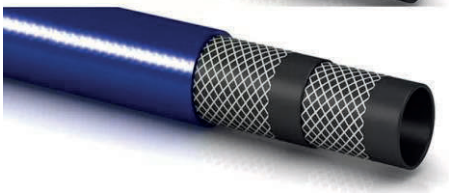

Tubo flessibile multicolore retinato in EPDM, per e acqua e liquidi vari, con tecnologia Easy-Lock.
EPDM Flexible multicolour hose, reinforced, for water applications. Easy-Lock technology.

CARATTERISTICHE TECNICHE
Pressione max. di esercizio: 16 Bar.
Range di temperatura di esercizio: -40 / +125°C

TECHNICAL FEATURES
Max. working pressure: 16 Bar.
Working temperature range: -40 / +125°C

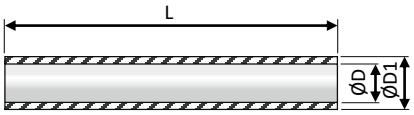

Raccordatura raccomandata – recommended clamping – Easylock

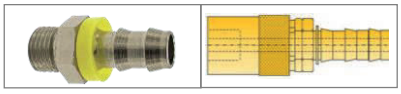

Codice-Code	D mm.	D inch	D1	max W Bar	max B Bar	r min	L std. mt.	colore colour
PC4450-10-B-L050	9.5	3/8"	13.5	28	112	75	50	
PC4450-10-R-L050	9.5	3/8"	13.5	28	112	75	50	
PC4450-13-B-L050	12.7	1/2"	16.6	28	112	90	50	
PC4450-13-R-L050	12.7	1/2"	16.6	28	112	90	50	
PC4450-16-B-L050	16	5/8"	22.5	24	96	120	50	
PC4450-16-R-L050	16	5/8"	22.5	24	96	120	50	
PC4450-19-B-L050	19	3/4"	24	24	96	135	50	
PC4450-19-R-L050	19	3/4"	24	24	96	135	50	

PA4200

TUBO FLESSIBILE **POLIURETANO** PER INNESTI RAPIDI PNEUMATICI
POLYURETHANE HOSE FOR PNAUMETIC QUICK-COUPLINGS

PUET

Tubo flessibile in Poliuretano a base Polietere FDA per innesti rapidi pneumatici. Alta flessibilità e buone tolleranze - Polyurethane tube on polyether FDA basis has a high flexibility at low temperatures and a good tolerance to wear and tear & chemicals.

CARATTERISTICHE TECNICHE
Utilizzabili con aria compressa, **acqua**, acqua potabile.
Range di temperatura di esercizio: 0°C ÷ +60°C.
DUREZZA 52 A Shore. Prodotto secondo la direttiva 2002/95/EC, e 2011/65/EU

TECHNICAL FEATURES
Compressed air, **water** and potable water use.
Working temperature range: 0°C ÷ +60°C
HARDNESS Shore 52 A.

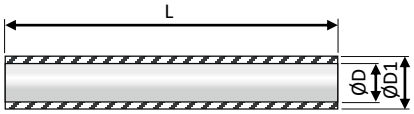

Raccordatura raccomandata – tutti i raccordi push-in pneumatici
Reccomended clamping – any push-in pneumatic quick couplings

Codice-Code	D		D1	r min 23°C esercizio-work	max Bar esercizio-work	max Bar scoppio-burst	L std. mt.	colore colour
PA4200-06-B-L050	4	±0,1	6	15	11	34	50	
PA4200-06-R-L050	4	±0,1	6	15	11	34	50	
PA4200-08-B-L050	6	±0,1	8	25	10	31	50	
PA4200-08-R-L050	6	±0,1	8	25	10	31	50	
PA4200-10-B-L050	7	±0,1	10	40	9	27	50	
PA4200-10-R-L050	7	±0,1	10	40	9	27	50	
PA4200-12-B-L050	8	±0,15	12	35	10	32	50	
PA4200-12-R-L050	8	±0,15	12	35	10	32	50	
PA4200-14-B-L050	10	±0,15	14	55	8	25	50	
PA4200-14-R-L050	10	±0,15	14	55	8	25	50	
PA4200-16-B-L050	11	±0,15	16	55	9	27	50	
PA4200-16-R-L050	11	±0,15	16	55	9	27	50	

PA4300

TUBO FLESSIBILE **POLIAMMIDE** PER INNESTI RAPIDI PNEUMATICI
POLYAMMIDE HOSE FOR PNAUMETIC QUICK-COUPLINGS

PA12

Tubo flessibile in Poliammide per innesti rapidi pneumatici. Alta flessibilità, buona resistenza ad alte temperature - Polyammide tube with a high flexibility at low temperatures and a hight restistance to mechanical stress and hight temperature.

CARATTERISTICHE TECNICHE
Utilizzabili con aria compressa, **acqua e olio**. Temperatura di esercizio: -40°C ÷ +80°C. DUREZZA 65 A Shore.

TECHNICAL FEATURES
Compressed air, **water and oil**. Max. Working temperature range: -40°C ÷ +80°C HARDNESS Shore 65 A.

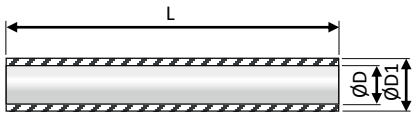

Raccordatura raccomandata – tutti i raccordi push-in pneumatici
Reccomended clamping – any push-in pneumatic quick couplings

Codice-Code	D		D1	r min	max Bar esercizio-work 34°C	max Bar scoppio-burst 34°C	L std. mt.	colore colour
PA4300-06-B-L100	4	±0,1	6	30	27	81	100	
PA4300-06-R-L100	4	±0,1	6	30	27	81	100	
PA4300-06-T-L100	4	±0,1	6	30	27	81	100	
PA4300-08-B-L100	6	±0,1	8	20	20	60	100	
PA4300-08-R-L100	6	±0,1	8	20	20	60	100	
PA4300-08-T-L100	6	±0,15	8	20	20	60	100	
PA4300-10-B-L050	8	±0,15	10	15	45	60	50	
PA4300-10-R-L025	8	±0,15	10	15	45	60	50	
PA4300-10-T-L050	8	±0,15	10	15	45	60	50	
PA4300-12-B-L050	10	±0,15	12	13	39	60	50	
PA4300-12-R-L050	10	±0,15	12	13	39	60	50	
PA4300-12-T-L050	10	±0,15	12	13	39	60	50	
PA4300-14-B-L050	12	±0,15	14	11	33	90	50	
PA4300-14-R-L050	12	±0,15	14	11	33	90	50	
PA4300-14-T-L050	12	±0,15	14	11	33	90	50	

PA4250

TUBO FLESSIBILE **PU ALTA TEMPERATURA** PER INNESTI RAPIDI PNEUMATICI
HIGH TEMPERATURE PU HOSE FOR PNAUMETIC QUICK-COUPLINGS

PU-HT

Tubo in Poliuretano HT. Tubo studiato per **lavorare in continuo con temperature fino a 80°C** con maggiore resistenza meccanica e flessibilità rispetto al tubo in PA12. Utilizzo con aria compressa ed acqua.
High temperature PU hose. Able to work continuously with temperatures up to 80°C and with higher flexibility and mechanical resistance comparing PA12 hoses. For compressed air and water.

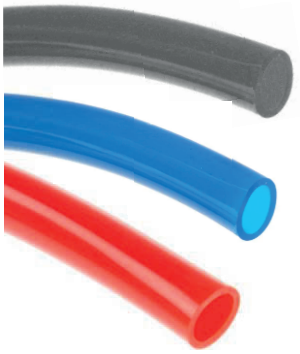

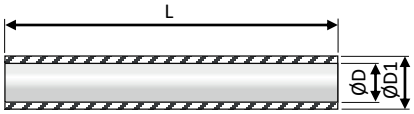

Raccordatura raccomandata – tutti i raccordi push-in pneumatici
Reccomended clamping – any push-in pneumatic quick couplings

Codice-Code	D	D1	r min	max Bar esercizio-work 23°C	max Bar scoppio-burst 34°C	L std. mt.	colore colour
PA4250-06-N-L100	4	6	18	12	34	100	
PA4250-06-B-L100						100	
PA4250-06-R-L100						100*	
PA4250-08-N-L100	5.7	8	27	11	32	100	
PA4250-08-B-L100						100	
PA4250-08-R-L100						100*	
PA4250-10-N-L100	7.5	10	45	10	26	100	
PA4250-10-B-L100						100	
PA4250-10-R-L100						100*	
PA4250-12-N-L100	9	12	55	9	26	100	
PA4250-12-N-L100						100	
PA4250-12-N-L100						100*	

Tubo rosso quantità minima 500 mt. Consegna 6 settimane. Red hose min. quantity 500 mt. Delivery time 6 weeks

PA4400

TUBO FLESSIBILE **PTFE** PER INNESTI RAPIDI PNEUMATICI
PTFE HOSE FOR PNAUMETIC QUICK-COUPLINGS

PTFE

Tubo flessibile in Teflon per innesti rapidi pneumatici. Adatto ad uso ad altissima temperatura per vari tipi di fluidi e nel campo alimentare - The PTFE-C tube, suitable for food, is realized with paste extruded PTFE. The high tensile stress and the high electrical and thermic insulate grade allow to our tubings to be used in different applications meeting quality standards like BS, DIN, UNI, AMS.

CARATTERISTICHE TECNICHE

Utilizzabili con aria compressa, **acqua, olio e fluidi chimici**. Temperatura di esercizio: -60°C ÷ +260°C. TOLLERANZE da Ø6 a Ø8 ± 0,1; da Ø10 a Ø12 ± 0,15; da Ø14 a Ø16 ± 0,2. DUREZZA D70 Shore. Prodotto secondo la direttiva 2002/95/EC, e 2011/65/EU

TECHNICAL FEATURES

Compressed air, **water, oil and chemical fluids.** Working temperature range: -60°C / +260°C. TOLERANCE From Ø3 to Ø: ± 0,1: From Ø10 to Ø12 ± 0,15; From Ø14 to Ø16 ± 0,2. HARDNESS Shore D70. Products in compliance with the directive 2002/95/EC, and 2011/65/EU

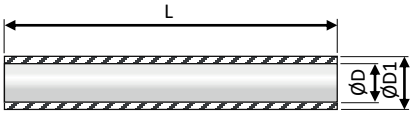

Raccordatura raccomandata – tutti i raccordi push-in pneumatici
Reccomended clamping – any push-in pneumatic quick couplings

Codice-Code	D		D1	r min	max Bar esercizio-work 34°C	max Bar scoppio-burst 34°C	L std. mt.	colore colour
PA4400-06-T-L050	4	±0,1	6	15	25	76	50	
PA4400-08-T-L050	6	±0,15	8	30	18	54	50	
PA4400-10-T-L050	8	±0,15	10	70	14	42	50	
PA4400-12-T-L025	10	±0,15	12	100	12	35	25	
PA4400-14-T-L025	12	±0,2	14	120	10	29	25	
PA4400-16-T-L025	13	±0,2	16	140	9	27	25	

PC4600

TUBO FLESSIBILE IN PTFE CON SUPERFICIE INTERNA LISCIA
PTFE FLEXIBLE HOSE, INNER SMOOTH SURFACE

PTFE

CARATTERISTICHE TECNICHE
Rivestimento trecciatura acciaio inox, per e acqua, olio e liquidi vari.
Range di temperatura di esercizio: -70 / +260°C

TECHNICAL FEATURES
Reinforced with Stainless steel wire braid, for water and oil applications.
Working temperature range: -70 / +260°C

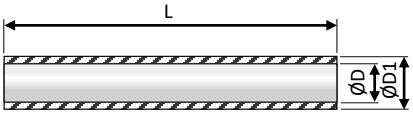

PC4601

Codice-Code	Ø pressatura Crimping	Codice-Code	DN	ØD	ØD1	r min	max W Bar 20°C	max B Bar 20°C
PC4601-014-Z	13	PC4600-014-L001	1/4"	6.35	9	45	175	700
PC4601-038-Z	15.5	PC4600-038-L001	3/8"	9.5	12.4	55	135	540
PC4601-012-Z	20.5	PC4600-012-L001	1/2"	12.7	15.7	70	120	480
PC4601-034-Z	27	PC4600-034-L001	3/4"	19	22.2	190	90	360
PC4601-100-Z	34	PC4600-100-L001	1"	25.4	29.3	270	65	260

BOCCOLA A PRESSARE IN ACCIAIO ZINCATO PER TUBO PTFE PC4600
GALVANIZED STEEL SWAGE FERRULE FOR PTFE HOSE TYPE PC4600

PER BOCCOLA INOX SOSTITUIRE "Z" CON "S" NEL CODICE - FOR STAINLESS STEEL SWAGE FERRULE REPLACE "Z" WITH "S" IN THE CODE

PC4650

TUBO FLESSIBILE IN PTFE CON SUPERFICIE INTERNA CORRUGATA
PTFE FLEXIBLE HOSE, INNER CORRUGATED SURFACE

PTFE

CARATTERISTICHE TECNICHE
rivestimento trecciatura acciaio inox, per e acqua, olio e liquidi vari. **Questa versione consente una eccellente flessibilità e capacità di curvatura rispetto al tubo liscio**. Range di temperatura di esercizio: -70 / +260°C

TECHNICAL FEATURES
reinforced with Stainless steel wire braid, for water and oil applications. **This version is extremely flexible and allows a great curvature.**
Working temperature range: -70 / +260°C

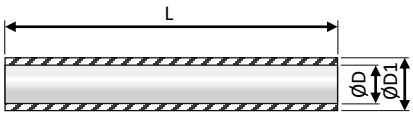

PC4651

Codice-Code	Ø pressatura Crimping	Codice-Code	DN	ØD		ØD1	r min	max W Bar 20°C	max B Bar 20°C
PC4651-014-Z	12.2	PC4650-014-L001	1/4"	5.95	6.45	9.65	18	135	405
PC4651-038-Z	16.8	PC4650-038-L001	3/8"	10	11	16.2	20	125	375
PC4651-012-Z	20.2	PC4650-012-L001	1/2"	13	14	19.7	25	110	330
PC4651-034-Z	26.7	PC4650-034-L001	3/4"	19.5	20.7	27.5	65	70	210
PC4651-100-Z	34	PC4650-100-L001	1"	25.4	26.8	34.3	90	50	150

BOCCOLA A PRESSARE IN ACCIAIO ZINCATO PER TUBO PTFE PC4650
GALVANIZED STEEL SWAGE FERRULE FOR PTFE HOSE TYPE PC4650

PER BOCCOLA INOX SOSTITUIRE "Z" CON "S" NEL CODICE - FOR STAINLESS STEEL SWAGE FERRULE REPLACE "Z" WITH "S" IN THE CODE

Promec FITTINGS

PC4700

TUBO FLESSIBILE IN NBR CON TRECCIA ZINCATA
NBR FLEXIBLE HOSE WITH GALVANIZED STEEL WIRE BRAID COVER

NBR

CARATTERISTICHE TECNICHE
Rivestimento trecciatura acciaio zincato, per e acqua, olio e liquidi vari.
Range di temperatura di esercizio: -20 / +90°C

TECHNICAL FEATURES
Reinforced with galvanized steel wire braid, for water and oil applications. Working temperature range: -20 / +90°C

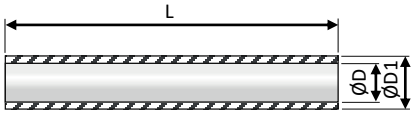

PC4701

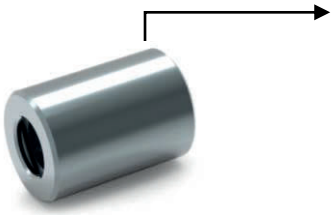

Codice-Code	Ø pressatura Crimping	Codice-Code	DN	ØD	ØD1	r min 20°C	max Bar esercizio work 20°C	max Bar scoppio burst	L std. mt.
PC4701-014	13,5	PC4700-014-L001	1/4"	6	11	30	25	75	100
PC4701-038	17,7	PC4700-038-L001	3/8"	10	15	50	25	75	100
PC4701-012	22	PC4700-012-L001	1/2"	13	19	65	25	75	100
PC4701-034	28	PC4700-034-L001	3/4"	19	25	95	20	60	50
PC4701-100	37	PC4700-100-L001	1"	25	33	125	15	45	50

PC4750

TUBO FLESSIBILE IN EPDM CON TRECCIA ZINCATA
EPDM FLEXIBLE HOSE WITH GALVANIZED STEEL wire braid cover

EPDM

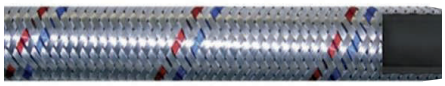

CARATTERISTICHE TECNICHE
rivestimento trecciatura acciaio zincato, per e acqua calda. Range di temperatura di esercizio: -30 / +100°C

TECHNICAL FEATURES
reinforced with galvanized steel wire braid, for hot water applications. Working temperature range: -20 / +100°C

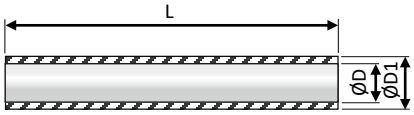

PC4701

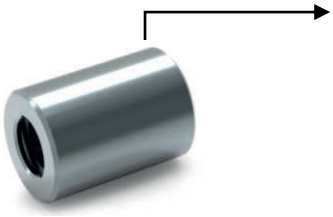

Codice-Code	Ø pressatura Crimping	Codice-Code	DN	ØD	ØD1	r min 20°C	max Bar esercizio work 20°C	max Bar scoppio burst	L std. mt.
PC4701-038	17,7	PC4750-038-L001	3/8"	10	15	100	25	75	100
PC4701-012	22	PC4750-012-L001	1/2"	13	19	130	25	75	100
PC4701-034	28,8	PC4750-034-L001	3/4"	19	26	190	20	60	50
PC4701-100	37,5	PC4750-100-L001	1"	25	33	250	15	45	50
-	-	PC4750-114-L001	1"1/4	32	43	320	10	30	40
-	-	PC4750-112-L001	1"1/2	38	51	380	10	30	30

PH4150

TUBO SAE 100 R1AT TRECCIA ACCIAIO PER OLIO E ACQUA 100°C MEDIA PRESSIONE
SAE 100 R1AT HOSE, WITH STEEL WIRE BRAID REINFORCEMENT FOR OIL AND WATER 100°C MEDIUM PRESSURE

Tubo flessibile colore nero con treccia in acciaio di rinforzo e copertura in gomma sintetica resistente ad abrasione, oli, carburanti, agenti atmosferici. Utilizzo con acqua, acqua e glicole, olio minerale, olio diatermico.
Medium pressure hydraulic hose for mineral oil, water, aqueous solutions. Braid of high resistance steel. Black synthetic rubber cover, resistant to abrasion, oils, fuels, ozone, atmospheric agents.

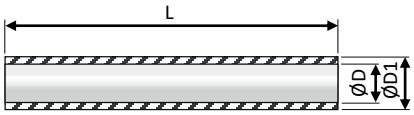

PH1051

BOCCOLA A PRESSARE IN ACCIAIO ZINCATO PER TUBO R1AT PH4150
GALVANIZED STEEL SWAGE FERRULE FOR R1AT HOSE PH4150

Codice-Code	Codice-Code	ØD mm	ØD inch	ØD1	L std. mt.	max W Bar	max B Bar	r min	colore colour
PH1051-014-AZ	PH4150-06-N-L001	6	1/4"	13	1	225	900	100	
PH1051-516-AZ	PH4150-08-N-L001	8	5/16"	14.7	1	215	850	115	
PH1051-038-AZ	PH4150-10-N-L001	10	3/8"	16.8	1	180	720	125	
PH1051-012-AZ	PH4150-13-N-L001	13	1/2"	20	1	160	640	180	
PH1051-058-AZ	PH4150-16-N-L001	16	5/8"	23.2	1	130	520	200	
PH1051-034-AZ	PH4150-19-N-L001	19	3/4"	27.1	1	105	420	240	
PH1051-100-AZ	PH4150-25-N-L001	25	1"	35.1	1	88	350	300	

PH4100

TUBO SAE 100 R1AT TRECCIA ACCIAIO PER OLIO E ACQUA 100°C MEDIA PRESSIONE
SAE 100 R1AT HOSE, WITH STEEL WIRE BRAID REINFORCEMENT FOR OIL AND WATER 100°C MEDIUM PRESSURE

Tubi flessibili rinforzati con doppia treccia in acciaio ad alta resistenza, standard SAE 100 2RT AT (EN 853 2SN). Adatto ad utilizzo con oli minerali e vegetali, acqua, soluzioni acquose. Substrato in gomma sintetica. Copertura in gomma sintetica nera resistente ad abrasione, oli, carburanti, ozono, agenti atmosferici. Temperatura di esercizio da -40°C a +100°C.

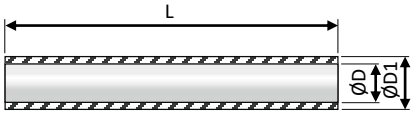

Reinforced flexible hoses with double braid in steel, high resistance, SAE 100 2RT AT (EN 853 2SN). Adapt for use with mineral and vegetal oil, water, water with additives. Working temperature from -40° to +100°C.

PH1051

BOCCOLA A PRESSARE IN ACCIAIO ZINCATO PER TUBO R1AT PH4150
GALVANIZED STEEL SWAGE FERRULE FOR R1AT HOSE PH4150

Codice-Code	Ø pressatura Crimping	Codice-Code	ØD inch	ØD mm	ØD1	max W Bar	max B Bar	r min	Lunghezza Lenght mt.
PH1051-014	18.2	PH4100-014-L001	1/4"	6,6	14,4	400	1600	100	1
PH1051-038	20.6	PH4100-038-L001	3/8"	9,9	18,4	330	1320	125	1
PH1051-012	23.4	PH4100-012-L001	1/2"	13	21,4	275	1100	180	1
PH1051-034	31.2	PH4100-034-L001	3/4"	19,5	28,6	215	850	240	1
PH1051-100	38.3	PH4100-100-L001	1"	26	37,1	165	650	300	1

PC4950

TUBO FLESSIBILE PU ANTISTATICO CON SPIRALE IN PVC PER ASPIRAZIONE POLIMERI
ANTI-STATIC PU HOSE WITH PVC HELIX FOR GRANULATES DUCTING

Tubo flessibile in Poliuretano antistatico con spirale in PVC per aspirazione di polveri e granuli abrasivi. Sotto-strato liscio in poliuretano a base etere trasparente antiabrasivo. Spirale in pvc rigido antiurto e cordicella di rame esterna. Copertura in Poliuretano trasparente antiabrasivo. Superficie ondulata.
Temperatura di esercizio -25°C - +85°C

Pvc wire polyurethane hose suitabe for suction of granulates and other abrasive materials. Antistatic hose. Reinforcement for impact and crush resistance by orange pvc wire helix and copper wire. Weathering and most chemicals resistant by transparent pvc cover. External surface corrugated.

Working temperature -25°C / +85°C

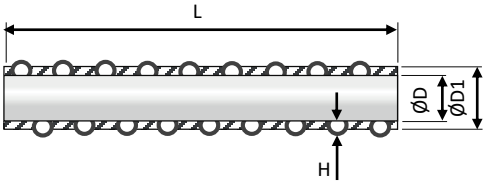

Codice-Code	ØD	ØD1	H	r min 20°C	max W Bar	L std. mt.
PC4950-025-L020	25	24	2	25	0.5	20
PC4950-035-L020	35	35	2.5	35	0.4	20
PC4950-040-L020	40	46	3	40	0.4	20
PC4950-050-L020	50	57	3.5	45	0.4	20
PC4950-060-L020	60	68	4	50	0.4	20

PC4960

TUBO FLESSIBILE PU ANTISTATICO CON SPIRALE IN PVC PER ASPIRAZIONE POLIMERI – SERIE PESANTE
ANTI-STATIC PU HOSE WITH PVC HELIX FOR GRANULATES DUCTING – HEAVY DUTIES

Tubo flessibile in Poliuretano antistatico con spirale in PVC per aspirazione di polveri e granuli abrasivi. Sotto-strato liscio in poliuretano a base etere trasparente antiabrasivo. Spirale in pvc rigido antiurto e cordicella di rame esterna. Copertura in PVC trasparente antiabrasivo. Superficie ondulata.
Temperatura di esercizio -10°C - +60°C

Pvc wire polyurethane hose suitabe for suction of granulates and other abrasive materials. Antistatic hose. Reinforcement for impact and crush resistance by orange pvc wire helix and copper wire. PVC External cover. Weathering and most chemicals resistant by transparent pvc cover. External surface corrugated.

Working temperature -10°C / +60°C

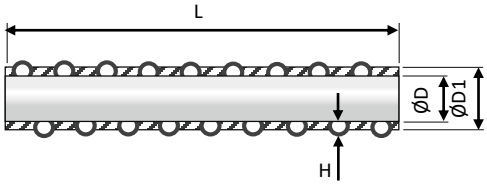

Codice-Code	ØD	ØD1	H	r min 20°C	max W Bar	L std. mt.
PC4960-040-L030	40	47	3.5	190	5	30
PC4960-050-L030	50	58	4	220	5	30
PC4960-060-L030	60	68	4	270	5	30

PC4900

GUAINA DI PROTEZIONE TERMICA IN VETRO-SILICONE 200°C PER TUBI FLESSIBILI
SILICON-GLASS THERMICAL PROTECTION 200°C FOR FLEXIBLE HOSES

Caratteristiche tecniche:
Campo di temperatura: -40°C\+200°C (260°C di picco). Spessore parete in silicone 1 mm. Autoestinguente. Norme: 1441 VW – I – EN 45545-1 EN 45545-2+A1
Technical features:
Working temperature range: -40°C\+200°C (peaks of 260°C). Silicon wall thickness: 1 mm. Fire self-extinguish. Standards: 1441 VW – I – EN 45545-1 EN 45545-2+A1

PC5110

FASCETTA A DUE ORECCHIE ACCIAIO ZINCATO
GALVANIZED STEEL DOUBLE-HEAR CLIP

	Codice-Code	Ø interno inner	Colore Colour	Tubo - Hose PC4600	Tubo - Hose PC4650
PC5110-1113-Z	PC4900-010-R-L001	10		1/4"	1/4"
	PC4900-010-N-L001				
PC5110-1417-Z	PC4900-014-R-L001	14		3/8"	-
	PC4900-014-N-L001				
PC5110-1720-Z	PC4900-018-R-L001	18		1/2"	3/8"
PC5110-2023-Z	PC4900-020-R-L001	20		-	1/2"
	PC4900-020-N-L001			*1/2"	*3/8"-1/2"
PC5110-2327-Z	PC4900-025-R-L001	25		3/4"	-
PC5110-2731-Z	PC4900-028-R-L001	28		-	3/4"
PC5110-3134-Z	PC4900-030-R-L001	30		1"	-
PC5110-3740-Z	PC4900-038-R-L001	38		-	1"

PC4901

GUAINA ELASTICA DI PROTEZIONE TERMICA IN VETRO-SILICONE 260°C PER TUBI FLESSIBILI
ELASTIC SILICON-GLASS THERMICAL PROTECTION 260°C FOR FLEXIBLE HOSES

Caratteristiche tecniche:
Campo di temperatura: -40°C\+260°C (290°C di picco). Spessore parete in silicone 1 mm. Autoestinguente. Norme: 1441 VW – I – EN 45545-1 EN 45545-2+A1
Technical features:
Working temperature range: -40°C\+260°C (peaks of 290°C). Silicon wall thickness: 1 mm. Fire self-extinguish. Standards: 1441 VW – I – EN 45545-1 EN 45545-2+A1

PC5110

FASCETTA A DUE ORECCHIE ACCIAIO ZINCATO
GALVANIZED STEEL DOUBLE-HEAR CLIP

	Codice-Code	Ø interno inner	Colore Colour	Tubo - Hose PC4600	Tubo - Hose PC4650
PC5110-1113-Z	PC4901-10-R-L001	10		1/4"	1/4"
	PC4901-10-N-L001				
PC5110-1417-Z	PC4901-014-R-L001	14		3/8"	-
	PC4901-014-N-L001				
PC5110-1720-Z	PC4901-016-R-L001	16		-	3/8"
	PC4901-016-N-L001				
PC5110-2023-Z	PC4901-020-R-L001	20		1/2"	1/2"
	PC4901-020-N-L001				
PC5110-2528-Z	PC4901-024-R-L001	24		3/4"	-
	PC4901-024-N-L001				
PC5110-2528-Z	PC4901-026-R-L001	26		-	3/4"
	PC4901-026-N-L001				
PC5110-3134-Z	PC4901-030-R-L001	30		1"	-
	PC4901-030-N-L001				
PC5110-3437-Z	PC4901-035-R-L001	35		-	1"
	PC4901-035-N-L001				

PC4910

GUAINA DI PROTEZIONE IN POLIPROPILENE PER TUBI FLESSIBILI
POLYPROPYLENE SLEEVE COVERING HOSES

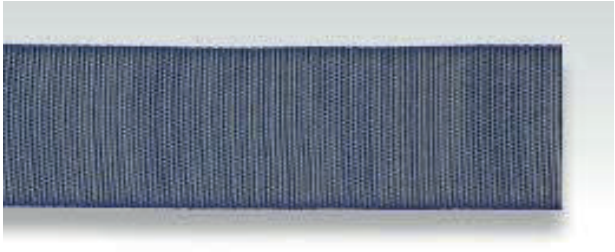

Codice-Code	Ø interno inner	Colore Colour	Lunghezza Lenght
PC4910-018-N-L100	18		100 mt
PC4910-020-N-L100	20		100 mt
PC4910-022-N-L100	22		100 mt
PC4910-025-N-L100	25		100 mt
PC4910-028-N-L100	28		100 mt
PC4910-032-N-L100	32		100 mt
PC4910-035-N-L100	35		100 mt
PC4910-038-N-L100	38		100 mt
PC4910-045-N-L100	45		100 mt
PC4910-050-N-L100	50		100 mt
PC4910-055-N-L100	55		100 mt
PC4910-070-N-L100	70		100 mt
PC4910-090-N-L100	90		100 mt

Caratteristiche tecniche:
Campo di temperatura: -40°C\+100°C. Resistenza all'abrasione ≥25k cicli, carico di rottura da 43 a 143 DaN, allungamento rottura 30%. Resistenza UV: EN 14471.
Technical features:
Working temperature range: -40°C\+100°C. Abrasion resistance ≥25k cycles; Stain at break: up 43 to 143 DaN; tensile strenght 30%. UV resistance: EN 14471

PC4920

GUAINA DI PROTEZIONE IN POLIAMMIDE PER TUBI FLESSIBILI
POLYAMMIDE HIGH STRENGHT COVERING HOSES SLEEVE

Codice-Code	Ø interno inner	Colore Colour	Lunghezza Lenght
PC4920-015-N-L025	15		25 mt
PC4920-020-N-L025	20		25 mt
PC4920-030-N-L025	30		25 mt
PC4920-040-N-L025	40		25 mt
PC4920-050-N-L025	50		25 mt
PC4920-080-N-L025	80		25 mt
PC4920-090-N-L025	90		25 mt
PC4920-120-N-L025	120		25 mt
PC4920-125-N-L025	125		25 mt

Caratteristiche tecniche:
Alta tenacità con chiusura a velcro. Spessore 1,5 mm. Campo di temperatura: -40°C\+120°C. Resistenza all'abrasione ≥50k cicli,
Technical features:
High strenght softwall polyammide covering. Thickness 1.5 mm. Working temperature range: -40°C\+120°C. Abrasion resistance ≥50k cycles.

Tubo flessibile a misura BASSA PRESSIONE, dotato di boccola a pressare e terminale **STD EUROPA**
Supply of **custom** LOW PRESSURE **flexible hoses** with end-cap and **EUROPEAN STD** hose insert.

Esempio di codice
Code sample:

PC4150-08 - **L _ _ _** - **T11-001- _**

PC4150
Pag. 168

PC4201
Pag. 169

PC4202
Pag. 169

PC4250
Pag. 170

PC4350
Pag. 171

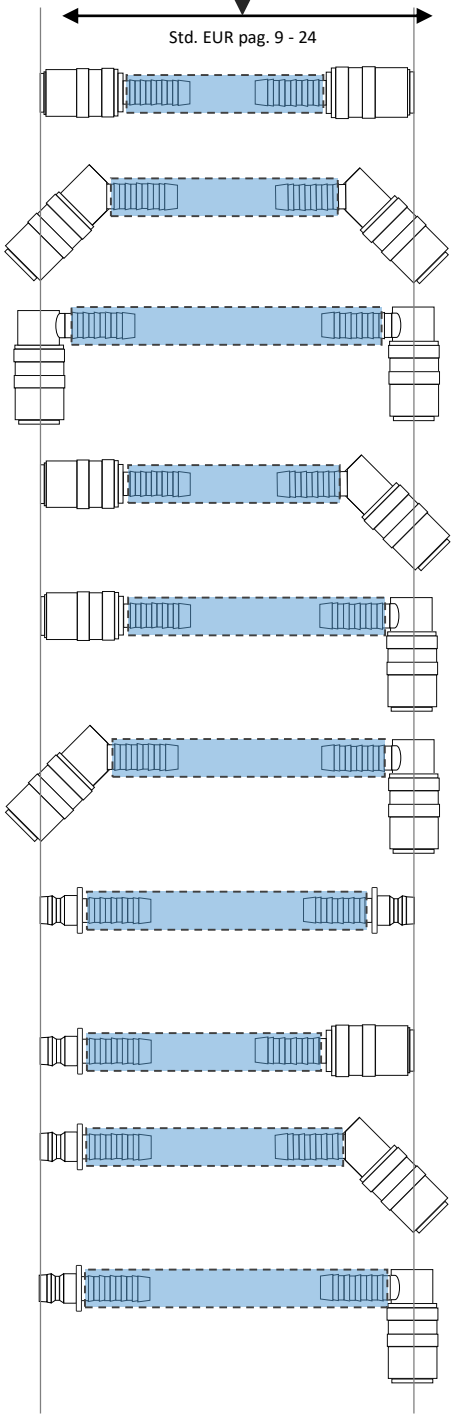

	Codice-Code: con valvola / with valve	Codice-Code: senza valvola / without valve	Codice-Code: safelock (option)	misura / size
Serie TOP	T11-001	T11-004	L	9
	T11-002	T11-005	L	13
	T11-003	T11-006	L	19
Serie ECO	E11-001	E11-004	L	9
	E11-002	E11-005	L	13
	E11-003	E11-006	L	19
Serie TOP	T11-011	T11-014	L	9
	T11-012	T11-015	L	13
	T11-013	T11-016	L	19
Serie ECO	E11-011	E11-014	L	9
	E11-012	E11-015	L	13
	E11-013	E11-016	L	19
Serie TOP	T11-021	T11-024	L	9
	T11-022	T11-025	L	13
	T11-023	T11-026	L	19
Serie ECO	E11-021	E11-024	L	9
	E11-022	E11-025	L	13
	E11-023	E11-026	L	19
Serie TOP	T11-031	T11-034	L	9
	T11-032	T11-035	L	13
	T11-033	T11-036	L	19
Serie ECO	E11-031	E11-034	L	9
	E11-032	E11-035	L	13
	E11-033	E11-036	L	19
Serie TOP	T11-041	T11-044	L	9
	T11-042	T11-045	L	13
	T11-043	T11-046	L	19
Serie ECO	E11-041	E11-044	L	9
	E11-042	E11-045	L	13
	E11-043	E11-046	L	19
Serie TOP	T11-051	T11-054	L	9
	T11-052	T11-055	L	13
	T11-053	T11-056	L	19
Serie ECO	E11-051	E11-054	L	9
	E11-052	E11-055	L	13
	E11-053	E11-056	L	19
Serie TOP	T11-061	T11-064	L	9
	T11-062	T11-065	L	13
	T11-063	T11-066	L	19
Serie ECO	E11-061	E11-064	L	9
	E11-062	E11-065	L	13
	E11-063	E11-066	L	19
Serie TOP	T11-071	T11-074	L	9
	T11-072	T11-075	L	13
	T11-073	T11-076	L	19
Serie ECO	E11-071	E11-074	L	9
	E11-072	E11-075	L	13
	E11-073	E11-076	L	19
Serie TOP	T11-081	T11-084	L	9
	T11-082	T11-085	L	13
	T11-083	T11-086	L	19
Serie ECO	E11-081	E11-084	L	9
	E11-082	E11-085	L	13
	E11-083	E11-086	L	19
Serie TOP	T11-091	T11-094	L	9
	T11-092	T11-095	L	13
	T11-093	T11-096	L	19
Serie ECO	E11-091	E11-094	L	9
	E11-092	E11-095	L	13
	E11-093	E11-096	L	19

Promec FITTINGS

Tubo flessibile a misura BASSA PRESSIONE, dotato di boccola a pressare e terminale **STD INTERNAZIONALE**.
Supply of **custom** LOW PRESSURE **flexible hoses** with end-cap and **INTERNATIONAL STD** hose insert.

Esempio di codice
Code sample:

PC4150-08 - L _ _ _ - T12-001- _

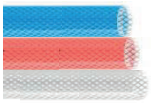

PC4150
Pag. 168

PC4200
Pag. 168

PC4250
Pag. 169

PC4300
Pag. 169

PC4350
Pag. 170

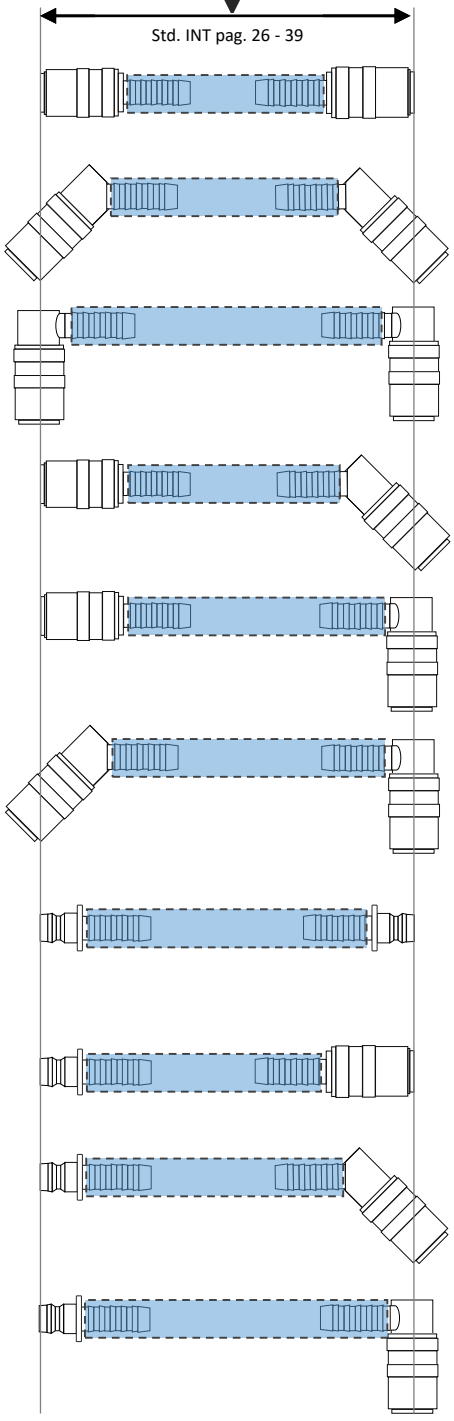

	Codice-Code con valvola with valve	Codice-Code senza valvola without valve	Codice-Code safelock (option)	misura size
Serie TOP	T12-001	T12-004	L	9
	T12-002	T12-005	L	13
	T12-003	T12-006	L	19
Serie ECO	E11-001	E11-004	L	9
	E11-002	E11-005	L	13
	E11-003	E11-006	L	19
Serie TOP	T12-011	T12-014	L	9
	T12-012	T12-015	L	13
	T12-013	T12-016	L	19
Serie ECO	E11-011	E11-014	L	9
	E11-012	E11-015	L	13
	E11-013	E11-016	L	19
Serie TOP	T12-021	T12-024	L	9
	T12-022	T12-025	L	13
	T12-023	T12-026	L	19
Serie ECO	E11-021	E11-024	L	9
	E11-022	E11-025	L	13
	E11-023	E11-026	L	19
Serie TOP	T12-031	T12-034	L	9
	T12-032	T12-035	L	13
	T12-033	T12-036	L	19
Serie ECO	E11-031	E11-034	L	9
	E11-032	E11-035	L	13
	E11-033	E11-036	L	19
Serie TOP	T12-041	T12-044	L	9
	T12-042	T12-045	L	13
	T12-043	T12-046	L	19
Serie ECO	E11-041	E11-044	L	9
	E11-042	E11-045	L	13
	E11-043	E11-046	L	19
Serie TOP	T12-051	T12-054	L	9
	T12-052	T12-055	L	13
	T12-053	T12-056	L	19
Serie ECO	E11-051	E11-054	L	9
	E11-052	E11-055	L	13
	E11-053	E11-056	L	19
Serie TOP	T12-061	T12-064	L	9
	T12-062	T12-065	L	13
	T12-063	T12-066	L	19
Serie ECO	E11-061	E11-064	L	9
	E11-062	E11-065	L	13
	E11-063	E11-066	L	19
Serie TOP	T12-071	T12-074	L	9
	T12-072	T12-075	L	13
	T12-073	T12-076	L	19
Serie ECO	E11-071	E11-074	L	9
	E11-072	E11-075	L	13
	E11-073	E11-076	L	19
Serie TOP	T12-081	T12-084	L	9
	T12-082	T12-085	L	13
	T12-083	T12-086	L	19
Serie ECO	E11-081	E11-084	L	9
	E11-082	E11-085	L	13
	E11-083	E11-086	L	19
Serie TOP	T12-091	T12-094	L	9
	T12-092	T12-095	L	13
	T12-093	T12-096	L	19
Serie ECO	E11-091	E11-094	L	9
	E11-092	E11-095	L	13
	E11-093	E11-096	L	19

Tubo flessibile a misura BASSA PRESSIONE, dotato di boccola a pressare e terminale **STD FRANCESE**.
Supply of **custom** LOW PRESSURE **flexible hoses** with end-cap and **FRENCH STD** hose insert.

Esempio di codice
Code sample:

PC4100-08 - **L _ _ _** - **13-001**

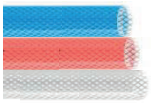

PC4150
Pag. 168

PC4200
Pag. 168

PC4250
Pag. 169

PC4300
Pag. 169

PC4350
Pag. 170

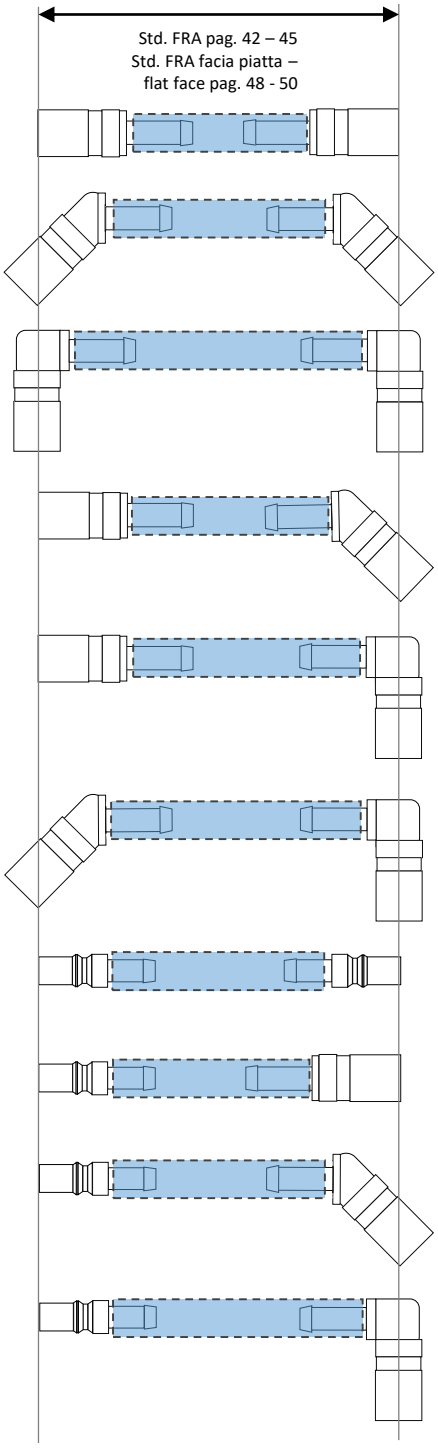

Codice-Code			misura size
PC1300		PC1400	
con valvola with valve	senza valvola without valve	con valvola with valve	
13-001	14-101	14-001	6
13-002	14-102	14-002	9
13-003	14-103	14-003	12
13-004	14-104	14-004	16
13-011	14-111	14-011	6
13-012	14-112	14-012	9
13-013	14-113	14-013	12
13-014	14-114	14-014	16
13-021	14-121	14-021	6
13-022	14-122	14-022	9
13-023	14-123	14-023	12
13-024	14-124	14-024	16
13-031	14-131	14-031	6
13-032	14-132	14-032	9
13-033	14-133	14-033	12
13-034	14-134	14-034	16
13-041	14-141	14-041	6
13-042	14-142	14-042	9
13-043	14-143	14-043	12
13-044	14-144	14-044	16
13-051	14-151	14-051	6
13-052	14-152	14-052	9
13-053	14-153	14-053	12
13-054	14-154	14-054	16
13-061	14-161	14-061	6
13-062	14-162	14-062	9
13-063	14-163	14-063	12
13-064	14-164	14-064	16
13-071	14-171	14-071	6
13-072	14-172	14-072	9
13-073	14-173	14-073	12
13-074	14-174	14-074	16
13-081	14-181	14-081	6
13-082	14-182	14-082	9
13-083	14-183	14-083	12
13-084	14-184	14-084	16
13-091	14-191	14-091	6
13-092	14-192	14-092	9
13-093	14-193	14-093	12
13-094	14-193	14-093	16

Tubo flessibile a misura BASSA PRESSIONE, dotato di boccola a pressare e terminale **STD FRANCESE**.
Supply of **custom** LOW PRESSURE **flexible hoses** with end-cap and **FRENCH STD** hose insert.

Esempio di codice
Code sample:

PC4150-08 - **L _ _ _** - **13-001**

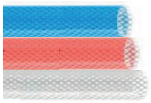

PC4150
Pag. 168

PC4200
Pag. 168

PC4250
Pag. 169

PC4300
Pag. 169

PC4350
Pag. 170

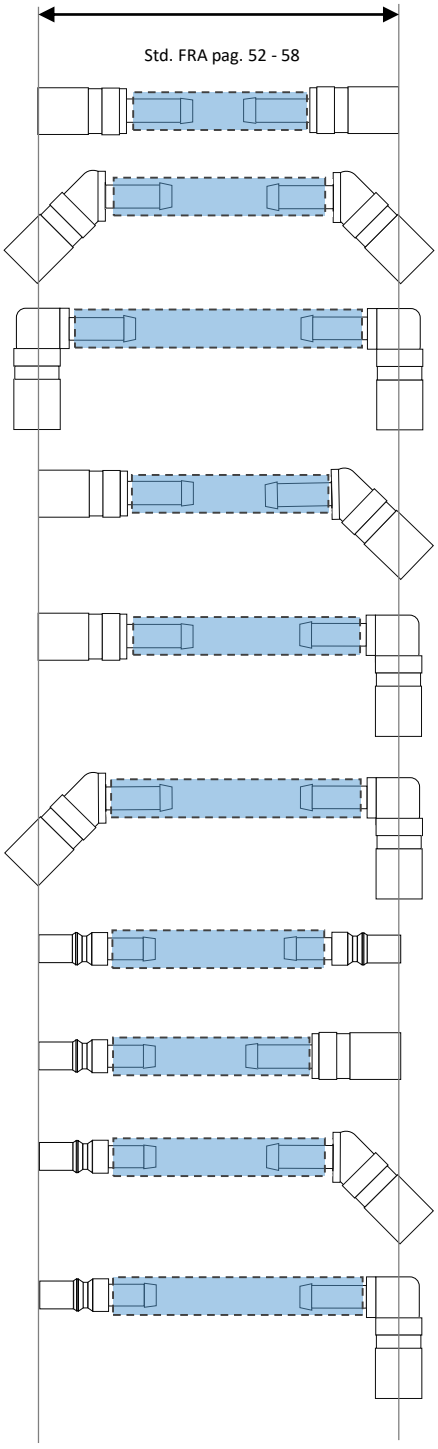

Codice Code	misura size
15-001	8
15-002	12
15-011	6
15-012	8
15-013	12
15-021	8
15-022	12
15-031	8
15-032	12
15-041	8
15-042	12
15-051	8
15-052	12
15-061	8
15-062	12
15-071	8
15-072	12
15-081	8
15-082	12
15-091	8
15-092	12

Tubo flessibile oleodinamico e Tubo PTFE+inox – Flexible hoses for hydraulic oil and PTFE+inox hoses

Esempio di codice
Code sample:

PH4100 - 014 - L . . . . - H101 - Z

Lunghezza in mm - mm Lenght

PH4150 – pag. 177

PH4100 – pag. 177

PC4350 – pag. 170

PC4600 – Pag. 175

PC4650 – Pag. 175

PC4700 – Pag. 176

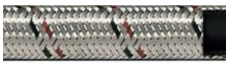

PC4750 – Pag. 176

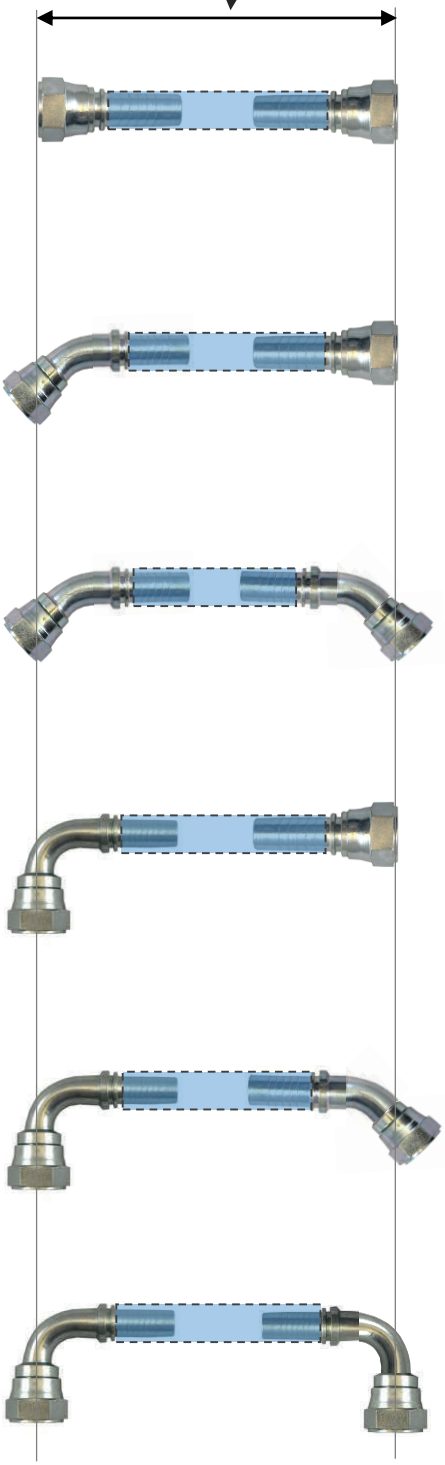

Codice Code	misura tubo hose size	filetto thread	raccordi-plugs acciaio zinc zinc steel	raccordi-plugs inox
H0101	1/4"	G1/4"	Z	S
H0102	1/4"	G3/8"	Z	S
H0103	3/8"	G1/4"	Z	S
H0104	3/8"	G3/8"	Z	S
H0105	3/8"	G1/2"	Z	S
H0107	1/2"	G3/8"	Z	S
H0108	1/2"	G1/2"	Z	S
H0109	1/2"	G3/4"	Z	S
H0111	3/4"	G3/4"	Z	S
H0112	3/4"	G1"	Z	S
H0114	1"	G1"	Z	S
H0201	1/4"	G1/4"	Z	S
H0202	1/4"	G3/8"	Z	S
H0203	3/8"	G1/4"	Z	S
H0204	3/8"	G3/8"	Z	S
H0205	3/8"	G1/2"	Z	S
H0207	1/2"	G3/8"	Z	S
H0208	1/2"	G1/2"	Z	S
H0209	1/2"	G3/4"	Z	S
H0211	3/4"	G3/4"	Z	S
H0212	3/4"	G1"	Z	S
H0214	1"	G1"	Z	S
H0301	1/4"	G1/4"	Z	S
H0302	1/4"	G3/8"	Z	S
H0303	3/8"	G1/4"	Z	S
H0304	3/8"	G3/8"	Z	S
H0305	3/8"	G1/2"	Z	S
H0307	1/2"	G3/8"	Z	S
H0308	1/2"	G1/2"	Z	S
H0309	1/2"	G3/4"	Z	S
H0311	3/4"	G3/4"	Z	S
H0312	3/4"	G1"	Z	S
H0314	1"	G1"	Z	S
H0401	1/4"	G1/4"	Z	S
H0402	1/4"	G3/8"	Z	S
H0403	3/8"	G1/4"	Z	S
H0404	3/8"	G3/8"	Z	S
H0405	3/8"	G1/2"	Z	S
H0407	1/2"	G3/8"	Z	S
H0408	1/2"	G1/2"	Z	S
H0409	1/2"	G3/4"	Z	S
H0411	3/4"	G3/4"	Z	S
H0412	3/4"	G1"	Z	S
H0414	1"	G1"	Z	S
H0501	1/4"	G1/4"	Z	S
H0502	1/4"	G3/8"	Z	S
H0503	3/8"	G1/4"	Z	S
H0504	3/8"	G3/8"	Z	S
H0505	3/8"	G1/2"	Z	S
H0507	1/2"	G3/8"	Z	S
H0508	1/2"	G1/2"	Z	S
H0509	1/2"	G3/4"	Z	S
H0511	3/4"	G3/4"	Z	S
H0512	3/4"	G1"	Z	S
H0514	1"	G1"	Z	S
H0601	1/4"	G1/4"	Z	S
H0602	1/4"	G3/8"	Z	S
H0603	3/8"	G1/4"	Z	S
H0604	3/8"	G3/8"	Z	S
H0605	3/8"	G1/2"	Z	S
H0607	1/2"	G3/8"	Z	S
H0608	1/2"	G1/2"	Z	S
H0609	1/2"	G3/4"	Z	S
H0611	3/4"	G3/4"	Z	S
H0612	3/4"	G1"	Z	S
H0614	1"	G1"	Z	S

RACCOMANDAZIONI PER L'INSTALLAZIONE DEI TUBI FLESSIBILI
FLEXIBLE HOSES INSTALLATION RECCOMANDATIONS

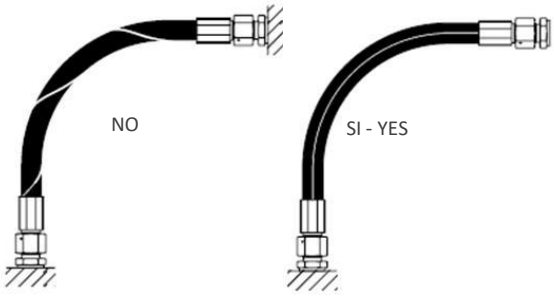

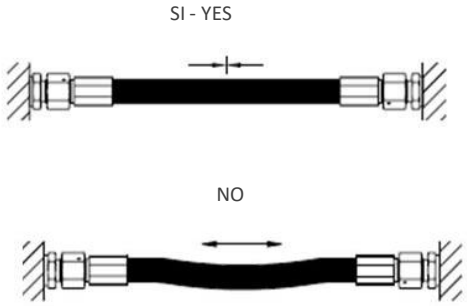

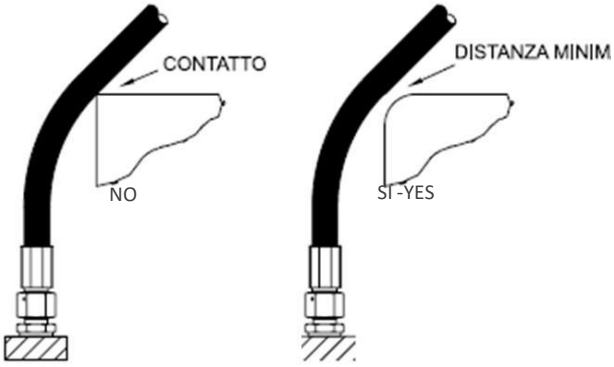

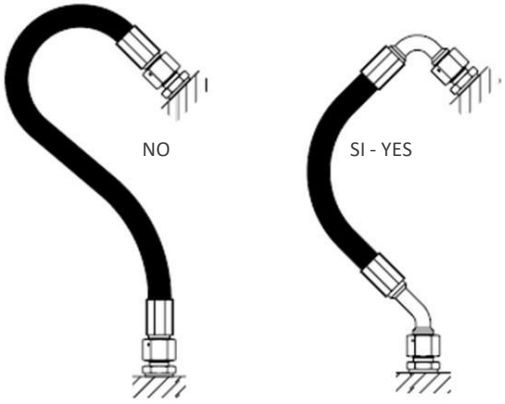

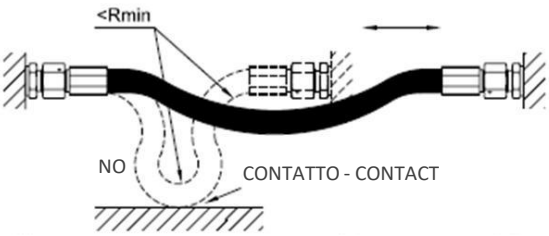

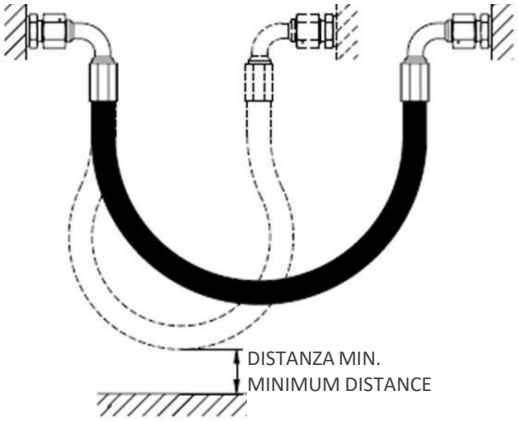

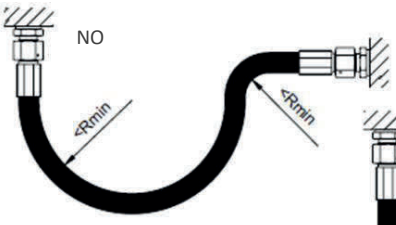

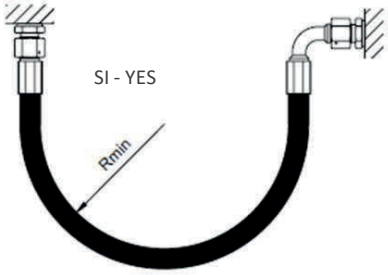

COLLETTORI IN OTTONE SERIE ECO
BRASS MANIFOLD ECO SERIES **PM100** **188**

COLLETTORI IN ALLUMINIO PROFILO PIATTO
ALUMINIUM MANIFOLD FLAT PROFILE **PM200** **190**

COLLETTORI IN ALLUMINIO ANODIZZATO
ANODIZED ALLUMINIUM MANIFOLD **PM400** **191**

COLLETTORI IN ALLUMINIO MULTI LATO
MULTI-SIDE ALUMINIUM MANIFOLD **PM500** **192**

COLLETTORI IN ACCIAIO INOX AISI 304
304 AISI STAINLESS STEEL MANIFOLD **PM350** **194**

COLLETTORI IN ACCIAIO INOX AISI 304
304 AISI STAINLESS STEEL MANIFOLD **PM360** **197**

COLLETTORI IN ACCIAIO INOX AISI 304
GRANDE PORTATA
HIGH FLOW 304 AISI STAINLESS STEEL
MANIFOLD **PM370** **198**

COLLETTORE ALLUMINIO ALTA PRESSIONE 250 BAR
250 BAR HIGH PRESSURE ALUMINIUM MANIFOLD **PM900** **199**

PIASTRE MULTI-CONNESSIONE
MULTICOUPLING PLATES **PM1300** **201**

PIASTRE MULTI-CONNESSIONE
MULTICOUPLING PLATES **PM0115** **219**

PIASTRE MULTI-CONNESSIONE
MULTICOUPLING PLATES **PM0108** **225**

Promec FITTINGS

PM100 COLLETTORE OTTONE SERIE ECO - BRASS MANIFOLD ECO SERIES

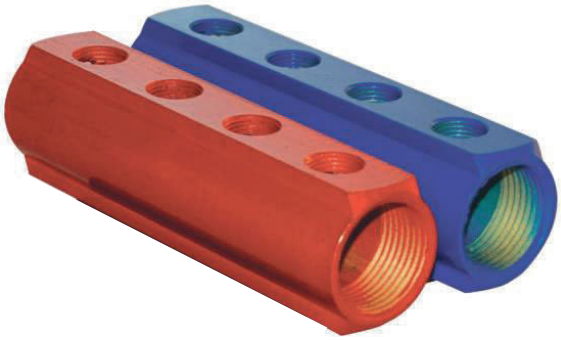

Collettore in ottone verniciato per distribuzione di aria e liquidi a bassa pressione. Disponibili in colore rosso, blu e neutro.
Campo di temperatura di esercizio -10 / +160°C. Pressione massima di esercizio 20 Bar.
Coloured manifold for air and low pressure liquids. Neutral, blue or red colour available.
Temperature range -10 / +160°C. Max. working pressure 20 Bar.

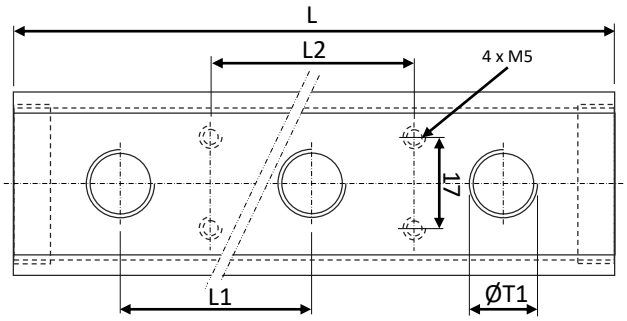

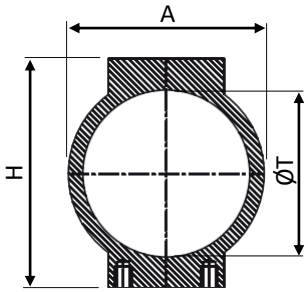

Specificare «R» per collettore rosso o «B» per blu
Specify «R» for red or «B» for blue manifold

Codice-Code	N. USCITE N. GATES	A	H	ØT	ØT1	L	L1	L2
PM100-ING034-04XG014-B__	4	31	35	G3/4"	G1/4"	155	35	70
PM100-ING034-06XG014-B__	6					225		
PM100-ING034-08XG014-B__	8					295		
PM100-ING034-10XG014-B__	10					365		
PM100-ING034-12XG014-B__	12					435		
PM100-ING034-04XG038-B__	4	31	35	G3/4"	G3/8"	155	35	70
PM100-ING034-06XG038-B__	6					225		
PM100-ING034-08XG038-B__	8					295		
PM100-ING034-10XG038-B__	10					365		
PM100-ING034-12XG038-B__	12					435		
PM100-ING100-04XG038-B__	4	37	39	G1"	G3/8"	165	40	70
PM100-ING100-06XG038-B__	6					235		
PM100-ING100-08XG038-B__	8					305		
PM100-ING100-10XG038-B__	10					375		
PM100-ING100-12XG038-B__	12					445		
PM100-ING100-04XG012-B__	4	37	39	G1"	G1/2"	210	40	70
PM100-ING100-06XG012-B__	6					310		
PM100-ING100-08XG012-B__	8					410		
PM100-ING100-10XG012-B__	10					510		
PM100-ING100-12XG012-B__	12					610		
PM100-ING114-04XG038-B__	4	46	50	G1" 1/4	G3/8"	196	40	150
PM100-ING114-06XG038-B__	6					276		
PM100-ING114-08XG038-B__	8					356		
PM100-ING114-10XG038-B__	10					436		
PM100-ING114-12XG038-B__	12					516		
PM100-ING114-16XG038-B__	16					676		
PM100-ING114-04XG012-B__	4	46	50	G1" 1/4	G1/2"	226	50	150
PM100-ING114-06XG012-B__	6					326		
PM100-ING114-08XG012-B__	8					426		
PM100-ING114-10XG012-B__	10					526		
PM100-ING114-12XG012-B__	12					626		
PM100-ING114-16XG012-B__	16					826		

PM101 STAFFA PER COLLETTORE OTTONE SERIE ECO – BRACKET FOR BRASS MANIFOLD ECO SERIES

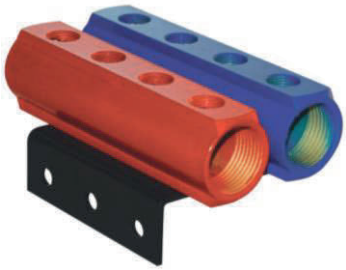

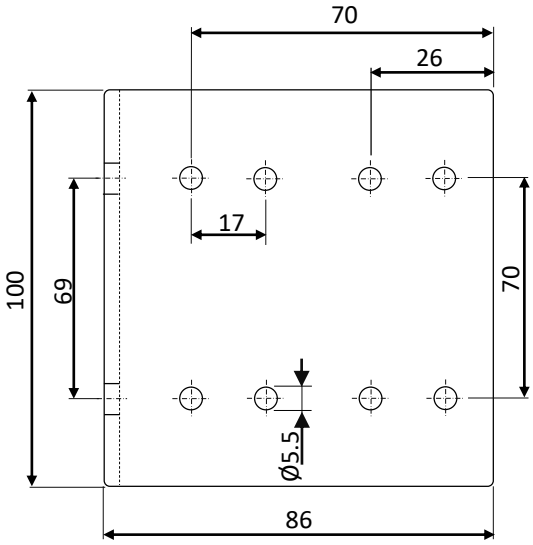

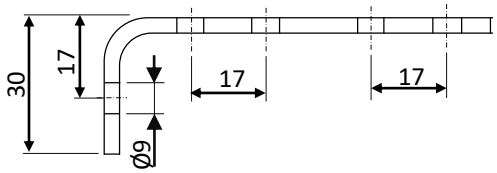

PM102-100 STAFFA DOPPIA PER COLLETTORE OTTONE SERIE ECO 3/4" E 1"
DOUBLE BRACKET FOR BRASS MANIFOLD ECO SERIES 3/4" AND 1"

PM102-114 STAFFA DOPPIA PER COLLETTORE OTTONE SERIE ECO 1"1/4
DOUBLE BRACKET FOR BRASS MANIFOLD ECO SERIES 1"1/4

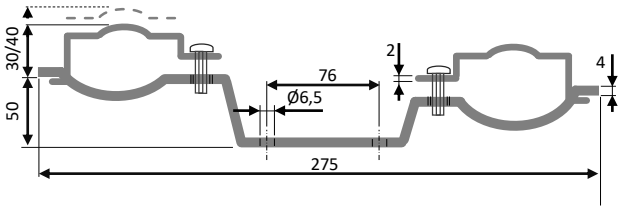

Promec FITTINGS

PM200

COLLETTORE IN ALLUMINIO SERIE FLAT per il passaggio di aria e liquidi a bassa pressione.
Campo di temperatura di esercizio -10 / +100°C. Pressione massima di esercizio 20 Bar.
ALUMINIUM MANIFOLD FLAT SERIE for air and low pressure liquids.
Temperature range -10 / +100°C. Max. working pressure 20 Bar.

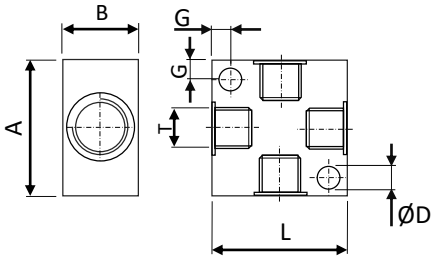

Codice-Code	N. Uscite	A	B	ØD	G	H	L	L1	ØT	ØT1
PM200-G018	3	25	16	4.5	4	-	-	-	G1/8"	-
PM200-G014	3	40	20	5.5	7	-	-	-	G1/4"	-
PM200-G038	3	40	25	5.5	7	-	-	-	G3/8"	-
PM200-G012	3	50	30	5.5	8	-	-	-	G1/2"	-

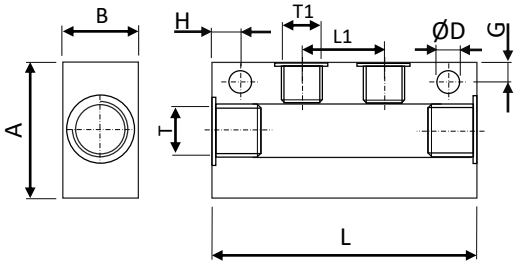

Codice-Code	N. Uscite	A	B	ØD	G	H	L	L1	ØT	ØT1
PM200-G018-M05-2	2	25	16	4.5	3.5	33	45	15	G1/8"	M5
PM200-G018-M05-4	4	25	16	4.5	3.5	63	75	15	G1/8"	M5
PM200-G018-M05-6	6	25	16	4.5	3.5	93	105	15	G1/8"	M5
PM200-G014-G018-2	2	30	20	4.5	4.5	45	54	18	G1/4"	G1/8"
PM200-G014-G018-4	4	30	20	4.5	4.5	81	90	18	G1/4"	G1/8"
PM200-G014-G018-6	6	30	20	4.5	4.5	117	126	18	G1/4"	G1/8"
PM200-G038-G014-2	2	40	25	5.5	4.5	51	68	24	G3/8"	G1/4"
PM200-G038-G014-4	4	40	25	5.5	4.5	99	116	24	G3/8"	G1/4"
PM200-G038-G014-6	6	40	25	5.5	4.5	147	164	24	G3/8"	G1/4"
PM200-G012-G038-2	2	50	30	5.5	6.5	59	78	26	G1/2"	G3/8"
PM200-G012-G038-4	4	50	30	5.5	6.5	111	130	26	G1/2"	G3/8"
PM200-G012-G038-6	6	50	30	5.5	6.5	163	182	26	G1/2"	G3/8"

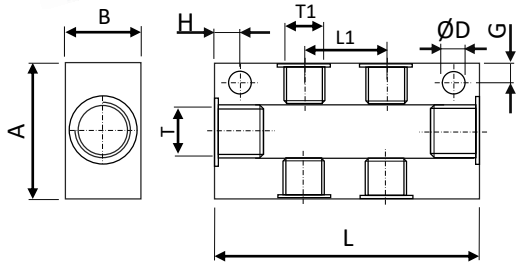

Codice-Code	N. Uscite	A	B	ØD	G	H	L	L1	ØT	ØT1
PM200-G018-M05-22	2+2	25	16	4.5	3.5	33	45	15	G1/8"	M5
PM200-G018-M05-44	4+4	25	16	4.5	3.5	63	75	15	G1/8"	M5
PM200-G018-M05-66	6+6	25	16	4.5	3.5	93	105	15	G1/8"	M5
PM200-G014-G018-22	2+2	30	20	4.5	4.5	45	54	18	G1/4"	G1/8"
PM200-G014-G018-44	4+4	30	20	4.5	4.5	81	90	18	G1/4"	G1/8"
PM200-G014-G018-66	6+6	30	20	4.5	4.5	117	126	18	G1/4"	G1/8"
PM200-G038-G014-22	2+2	40	25	5.5	4.5	51	68	24	G3/8"	G1/4"
PM200-G038-G014-44	4+4	40	25	5.5	4.5	99	116	24	G3/8"	G1/4"
PM200-G038-G014-66	6+6	40	25	5.5	4.5	147	164	24	G3/8"	G1/4"
PM200-G012-G038-22	2+2	50	30	5.5	6.5	59	78	26	G1/2"	G3/8"
PM200-G012-G038-44	4+4	50	30	5.5	6.5	111	130	26	G1/2"	G3/8"
PM200-G012-G038-66	6+6	50	30	5.5	6.5	163	182	26	G1/2"	G3/8"

PM400

COLLETTORE IN ALLUMINIO ANODIZZATO per distribuzione di aria e liquidi a bassa pressione.
Campo di temperatura di esercizio -10 / +160°C. Disponibile in colore rosso e blu. Pressione massima di esercizio 20 Bar.
ANODIZED ALUMINIUM MANIFOLD for air and low pressure liquids. Red and blue colour.
Temperature range -10 / +160°C. Max. working pressure 20 Bar.

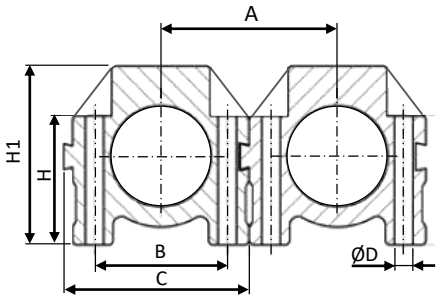

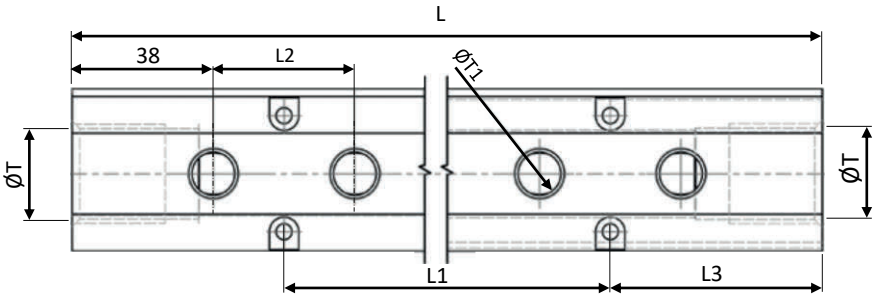

Specificare «R» per collettore rosso o «B» per blu
Specify «R» for red or «B» for blue manifold

Codice-Code	NR USCITE NR GATES	A	B	C	ØD	H	H1	L	L1	L2	L3	ØT BSPP	ØT1 BSPP
PM400-ING034-04XG014-A_	4	45	33	46.5	4.5	30	41	190	76	38	57	3/4"	1/4"
PM400-ING034-06XG014-A_	6							266	152				
PM400-ING034-08XG014-A_	8							342	228				
PM400-ING034-04XG038-A_	4	45	33	46.5	4.5	30	41	229	102	51	65	3/4"	3/8"
PM400-ING034-06XG038-A_	6							331	204				
PM400-ING034-08XG038-A_	8							433	306				
PM400-ING100-04XG014-A_	4	53	40.5	54.5	7.2	36.5	49.5	190	76	38	57	1"	1/4"
PM400-ING100-06XG014-A_	6							266	152				
PM400-ING100-08XG014-A_	8							342	228				
PM400-ING100-10XG014-A_	10							418	304				
PM400-ING100-12XG014-A_	12							494	380				
PM400-ING100-16XG014-A_	16							646	532				
PM400-ING100-04XG038-A_	4	53	40.5	54.5	7.2	36.5	49.5	229	102	51	65	1"	3/8"
PM400-ING100-06XG038-A_	6							331	204				
PM400-ING100-08XG038-A_	8							433	306				
PM400-ING100-10XG038-A_	10							535	408				
PM400-ING100-12XG038-A_	12							637	510				
PM400-ING100-16XG038-A_	16							841	714				
PM400-ING100-04XG012-A_	4	53	40.5	54.5	7.2	36.5	49.5	229	102	51	65	1"	1/2"
PM400-ING100-06XG012-A_	6							331	204				
PM400-ING100-08XG012-A_	8							433	306				
PM400-ING100-10XG012-A_	10							535	408				
PM400-ING100-12XG012-A_	12							637	510				

Promec FITTINGS

PM500

COLLETTORE IN ALLUMINIO ANODIZZATO SERIE MULTI per distribuzione di aria e liquidi a bassa pressione.
Campo di temperatura di esercizio -10 / +160°C. Pressione massima di esercizio 20 Bar.
ANODIZED ALUMINIUM MANIFOLD MULTI SERIES for air and low pressure liquids.
Temperature range -10 / +160°C. Max. working pressure 20 Bar.

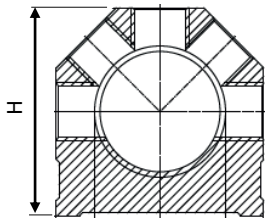

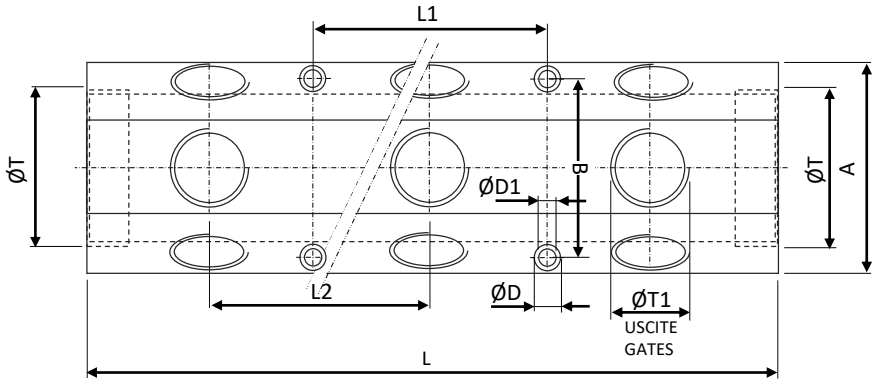

Codice-Code	Nr. Uscite Nr. Gates	A	B	D	D1	H	L	L1	L2	ØT BSPP	ØT1 BSPP
PM500-ING034-__-02XG014-A_	2	40.8	33	6.5	4.5	42	74	-	31	3/4"	1/4"
PM500-ING034-__-04XG014-A_	4	40.8	33	6.5	4.5	42	132	62	31	3/4"	1/4"
PM500-ING034-__-06XG014-A_	6	40.8	33	6.5	4.5	42	194	124	31	3/4"	1/4"
PM500-ING034-__-08XG014-A_	8	40.8	33	6.5	4.5	42	256	186	31	3/4"	1/4"
PM500-ING034-__-02XG038-A_	2	40.8	33	6.5	4.5	42	90	-	31	3/4"	3/8"
PM500-ING034-__-04XG038-A_	4	40.8	33	6.5	4.5	42	165	80	31	3/4"	3/8"
PM500-ING034-__-06XG038-A_	6	40.8	33	6.5	4.5	42	245	160	31	3/4"	3/8"
PM500-ING034-__-08XG038-A_	8	40.8	33	6.5	4.5	42	325	240	31	3/4"	3/8"
PM500-ING100-__-02XG014-A_	2	54	41.5	10.5	6.5	48	103	-	40	1"	1/4"
PM500-ING100-__-04XG014-A_	4	54	41.5	10.5	6.5	48	183	80	40	1"	1/4"
PM500-ING100-__-06XG014-A_	6	54	41.5	10.5	6.5	48	263	160	40	1"	1/4"
PM500-ING100-__-08XG014-A_	8	54	41.5	10.5	6.5	48	343	240	40	1"	1/4"
PM500-ING100-__-10XG014-A_	10	54	41.5	10.5	6.5	48	423	320	40	1"	1/4"
PM500-ING100-__-12XG014-A_	12	54	41.5	10.5	6.5	48	503	400	40	1"	1/4"
PM500-ING100-__-16XG014-A_	16	54	41.5	10.5	6.5	48	663	560	40	1"	1/4"
PM500-ING100-__-02XG038-A_	2	57	41.5	10.5	6.5	48	103	-	40	1"	3/8"
PM500-ING100-__-04XG038-A_	4	57	41.5	10.5	6.5	48	183	80	40	1"	3/8"
PM500-ING100-__-06XG038-A_	6	57	41.5	10.5	6.5	48	263	160	40	1"	3/8"
PM500-ING100-__-08XG038-A_	8	57	41.5	10.5	6.5	48	343	240	40	1"	3/8"
PM500-ING100-__-10XG038-A_	10	57	41.5	10.5	6.5	48	418	304	40	1"	3/8"
PM500-ING100-__-12XG038-A_	12	57	41.5	10.5	6.5	48	494	380	40	1"	3/8"
PM500-ING100-__-16XG038-A_	16	57	41.5	10.5	6.5	48	646	532	40	1"	3/8"
PM500-ING100-__-04XG012-A_	4	57	41.5	10.5	6.5	48	229	102	51	1"	1/2"
PM500-ING100-__-06XG012-A_	6	57	41.5	10.5	6.5	48	331	204	51	1"	1/2"
PM500-ING100-__-08XG012-A_	8	57	41.5	10.5	6.5	48	433	306	51	1"	1/2"
PM500-ING100-__-10XG012-A_	10	57	41.5	10.5	6.5	48	535	408	51	1"	1/2"
PM500-ING100-__-12XG012-A_	12	57	41.5	10.5	6.5	48	637	510	51	1"	1/2"
PM500-ING114-__-02XG014-A_	2	60	50	10.5	6.5	60	152	-	51	1"1/4	1/4"
PM500-ING114-__-04XG014-A_	4	60	50	10.5	6.5	60	254	101.6	51	1"1/4	1/4"
PM500-ING114-__-06XG014-A_	6	60	50	10.5	6.5	60	355	203.2	51	1"1/4	1/4"
PM500-ING114-__-08XG014-A_	8	60	50	10.5	6.5	60	457	304.8	51	1"1/4	1/4"
PM500-ING114-__-02XG038-A_	2	60	50	10.5	6.5	60	152	-	51	1"1/4	3/8"
PM500-ING114-__-04XG038-A_	4	60	50	10.5	6.5	60	254	101.6	51	1"1/4	3/8"
PM500-ING114-__-06XG038-A_	6	60	50	10.5	6.5	60	355	203.2	51	1"1/4	3/8"
PM500-ING114-__-08XG038-A_	8	60	50	10.5	6.5	60	457	304.8	51	1"1/4	3/8"
PM500-ING114-__-02XG012-A_	2	60	50	10.5	6.5	60	152	-	51	1"1/4	1/2"
PM500-ING114-__-04XG012-A_	4	60	50	10.5	6.5	60	254	101.6	51	1"1/4	1/2"
PM500-ING114-__-06XG012-A_	6	60	50	10.5	6.5	60	355	203.2	51	1"1/4	1/2"
PM500-ING114-__-08XG012-A_	8	60	50	10.5	6.5	60	457	304.8	51	1"1/4	1/2"
PM500-ING112-__-02XG038-A_	2	76	57	10.5	6.5	76	152	-	51	1"1/2	3/8"
PM500-ING112-__-04XG038-A_	4	76	57	10.5	6.5	76	254	101.6	51	1"1/2	3/8"
PM500-ING112-__-06XG038-A_	6	76	57	10.5	6.5	76	355	203.2	51	1"1/2	3/8"
PM500-ING112-__-08XG038-A_	8	76	57	10.5	6.5	76	457	304.8	51	1"1/2	3/8"
PM500-ING112-__-02XG012-A_	2	76	57	10.5	6.5	76	152	-	51	1"1/2	1/2"
PM500-ING112-__-04XG012-A_	4	76	57	10.5	6.5	76	254	101.6	51	1"1/2	1/2"
PM500-ING112-__-06XG012-A_	6	76	57	10.5	6.5	76	355	203.2	51	1"1/2	1/2"
PM500-ING112-__-08XG012-A_	8	76	57	10.5	6.5	76	457	304.8	51	1"1/2	1/2"

R Rosso-Red
B Blu – Blue

COLORE (Specificare)
COLOUR (Specify)

VERSIONE (Specificare)
VERSION (Specify)

STANDARD

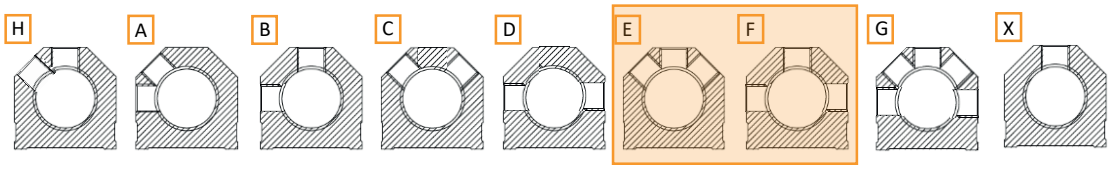

Promec FITTINGS

PM350

DISTRIBUTORI IN AISI 304 SERIE ECO 10 Bar 200°C – USCITE FIL. FEMMINA 1/2“ BSPP
AISI 304 STAINLESS STEEL MANIFOLD ECO SERIES 10 Bar 200°C – 1/2“ BSPP FEMALE THREAD GATES

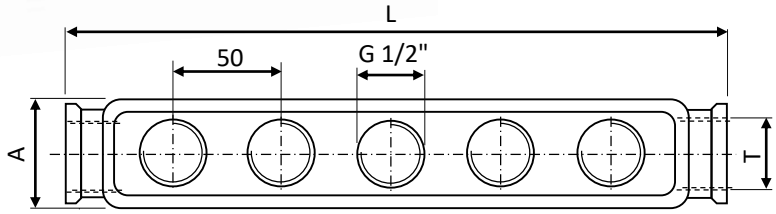

Codice-Code	N. USCITE N. GATES	A	L	ØT
PM350-ING100-02XG012-SN	2	40	125	G1"
PM350-ING100-03XG012-SN	3	40	175	G1"
PM350-ING100-04XG012-SN	4	40	225	G1"
PM350-ING100-05XG012-SN	5	40	275	G1"
PM350-ING100-06XG012-SN	6	40	325	G1"
PM350-ING100-08XG012-SN	8	40	425	G1"
PM350-ING100-10XG012-SN	10	40	525	G1"
PM350-ING100-12XG012-SN	12	40	625	G1"
PM350-ING100-13XG012-SN	13	40	675	G1"
PM350-ING114-06XG012-SN	6	50	325	G1"1/4
PM350-ING114-08XG012-SN	8	50	425	G1"1/4
PM350-ING114-10XG012-SN	10	50	525	G1"1/4
PM350-ING114-12XG012-SN	12	50	625	G1"1/4
PM350-ING114-13XG012-SN	13	50	675	G1"1/4

PC2260

Tappo ottone nichelato con O-Ring
Nickel-plated brass plug with O-Ring

Codice-Code	MISURA SIZE
PC2260-G012	G1/2"
PC2260-G100	G1"
PC2260-G114	G1"1/4

Codice-Code	MISURA SIZE
PC3101-2068	1/2"
PC3101-3112	1"
PC3101-3150	1"1/4

Codice-Code	MISURA SIZE
PH1198-012	1/2"
PH1198-100	1"
PH1198-114	1"1/4

PM351

Staffa singola (coppia) per PM350 e PM360
Single bracket (twin) for PM350 and PM360

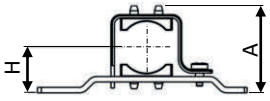

Codice-Code	MISURA SIZE	A	L	H	H1
PM351-ING100	1"	96	-	48	-
PM351-ING114	1"1/4	98	-	50	-

PM352

Staffa doppia (coppia)
Double bracket (twin

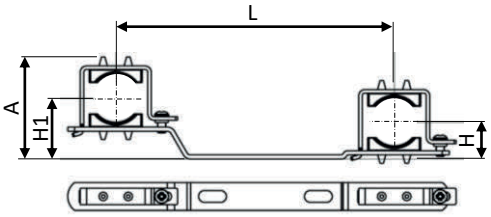

Codice-Code	MISURA SIZE	A	L	H	H1
PM352-ING100	1"	75	200	27	44
PM352-ING114	1"1/4	80	200	32	49

PM353 Gruppo Staffa modulare - Modular bracket Kit

PM350-MA1

Disco magnetico con gambo filettato – Magnetic disc with threaded rod

Collettori in linea - In-line Manifolds

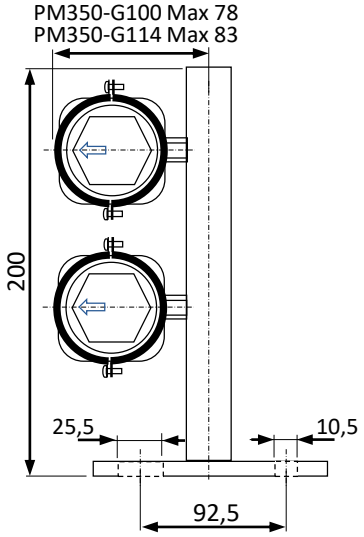

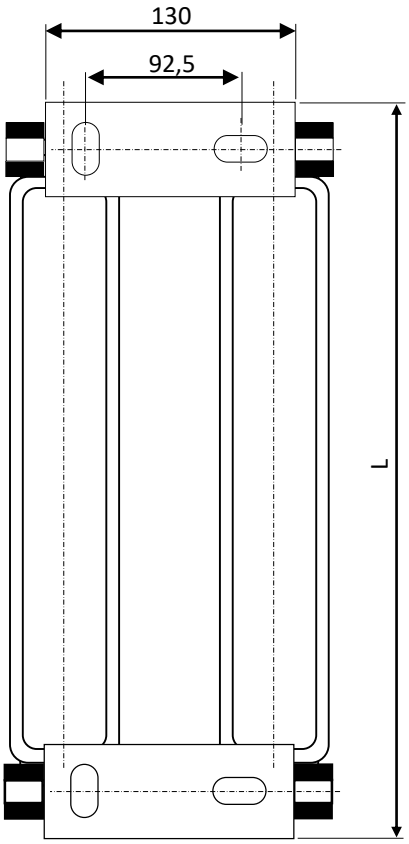

Distributori contrapposti - Side to side Manifolds

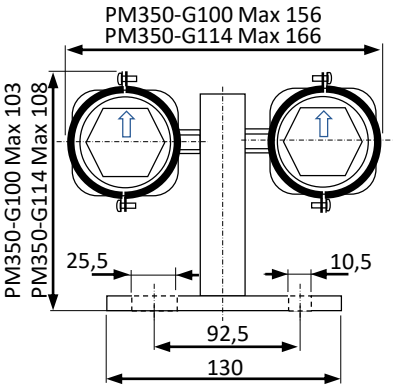

Codice-Code	L	ØT	max temp
PM353-ING100-L200	157*	G1"	90°C
PM353-ING100-L200-HT		G1"	200°C
PM353-ING100-L300		G1"	90°C
PM353-ING100-L300-HT		G1"	200°C
PM353-ING114-L200		G1"1/4	90°C
PM353-ING114-L200-HT		G1"1/4	200°C
PM353-ING114-L300		G1"1/4	90°C
PM353-ING114-L300-HT		G1"1/4	200°C

*: quota con 2 uscite. Aggiungere +50 mm per ogni uscita supplementare
*: measure with 2 gates. Add +50 mm each extra gate

Promec FITTINGS

SUGGERIMENTI PER MONTAGGIO E RACCORDATURA PM350
PM350 FITTING AND ASSEMBLY SUGGESTIONS

Le valvole a sfera (pag. 154-159) si possono raccordare orientando la leva con il PH1113 (pag. 111) e sigillare sfruttando il cono a 60° del raccordo che ben si abbina allo smusso della valvola, eventualmente con aggiunta di sigillante liquido (pag. 142)
Ball valves (pag. 154-159) can be fitted with lever orientation by using PH1113 (pag. 111) with cone 60° and eventually liquid sealing (pag. 142)

È possible installare qualsiasi raccordo o accessorio con filetto maschio CILINDRICO da 1/2“. Particolarmente indicato il PH1113 (pag. 111) che consente di applicare qualsiasi valvola a sfera con orientamento della leva o il PH1107 (pag. 104) o PH1123 (pag. 108) per altri accessori o attacchi rapidi.
Any plug or fitting with PARALLEL 1/2“ BSP can be connected to the manifold. Specially suggested the swivel **PH1113** (pag. 111) or the **PH1107** (pag. 104) as the **PH1123** (pag. 108) for most of other accessories or quick couplings.

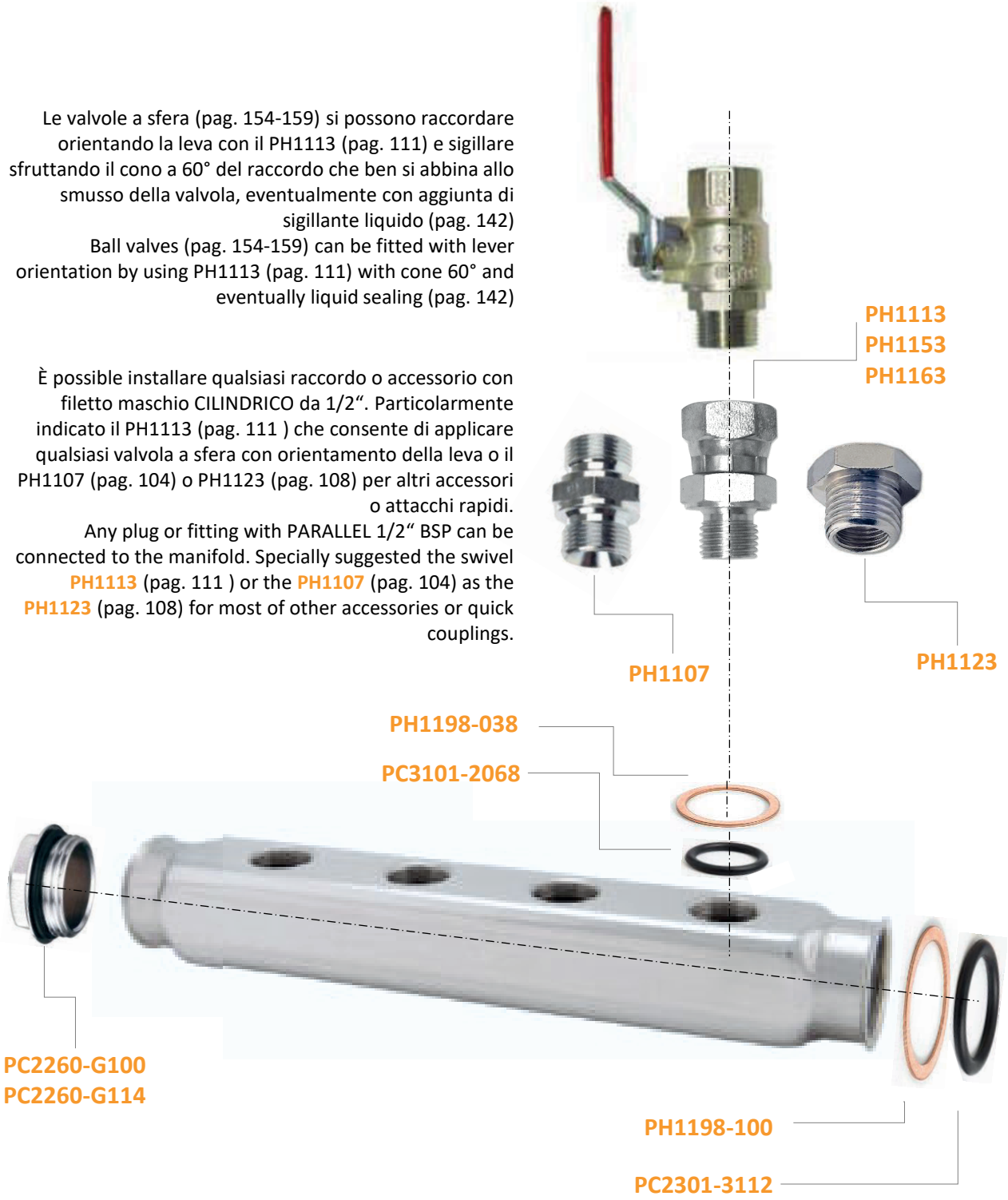

Disponibilità di soluzioni di isolamento termico.
Thermo-insulating solutions available

PM360

DISTRIBUTORI IN AISI 304 SERIE ECO 10 Bar 200°C – USCITE FIL. MASCHIO 1/2“ BSPP
AISI 304 STAINLESS STEEL MANIFOLD ECO SERIES 10 Bar 200°C– 1/2“ BSPP MALE THREAD GATES

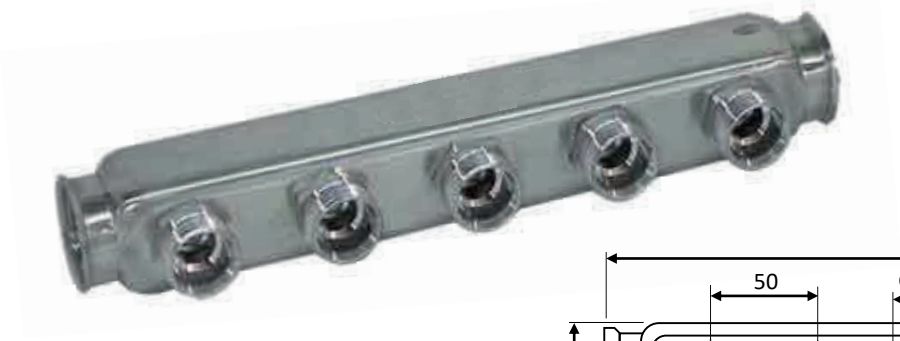

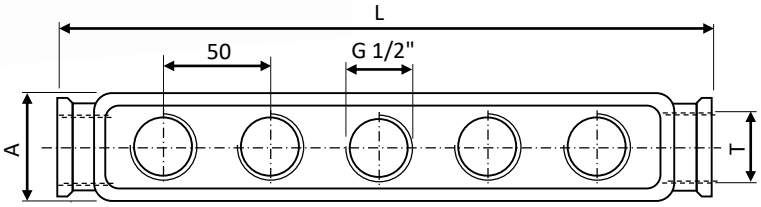

Codice-Code	N. USCITE N. GATES	A	L	ØT
PM360-ING100-02XG012-SN	2	40	125	G1"
PM360-ING100-03XG012-SN	3	40	175	G1"
PM360-ING100-04XG012-SN	4	40	225	G1"
PM360-ING100-05XG012-SN	5	40	275	G1"
PM360-ING100-06XG012-SN	6	40	325	G1"
PM360-ING100-08XG012-SN	8	40	425	G1"
PM360-ING100-10XG012-SN	10	40	525	G1"
PM360-ING100-12XG012-SN	12	40	625	G1"
PM360-ING100-13XG012-SN	13	40	675	G1"
PM360-ING114-06XG012-SN	6	50	325	G1"1/4
PM360-ING114-08XG012-SN	8	50	425	G1"1/4
PM360-ING114-10XG012-SN	10	50	525	G1"1/4
PM360-ING114-12XG012-SN	12	50	625	G1"1/4
PM360-ING114-13XG012-SN	13	50	675	G1"1/4

PC2260

Tappo ottone nichelato con O-Ring
Nickel-plated brass plug with O-Ring

Codice-Code	MISURA SIZE
PC2260-G012	G1/2"
PC2260-G100	G1"
PC2260-G114	G1"1/4

Codice-Code	MISURA SIZE
PC3101-2068	1/2"
PC3101-3112	1"
PC3101-3150	1"1/4

Codice-Code	MISURA SIZE
PH1198-012	1/2"
PH1198-100	1"
PH1198-114	1"1/4

PM351

Staffa singola (coppia) per PM350 e PM360
Single bracket (twin) for PM350 and PM360

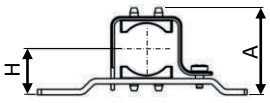

Codice-Code	MISURA SIZE	A	L	H	H1
PM351-ING100	1"	96	-	48	-
PM351-ING114	1"1/4	98	-	50	-

PM352

Staffa doppia (coppia)
Double bracket (twin

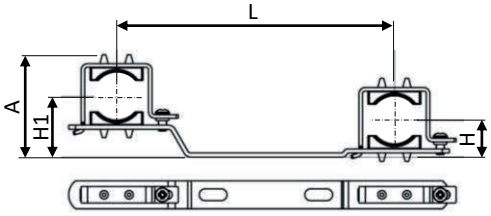

Codice-Code	MISURA SIZE	A	L	H	H1
PM352-ING100	1"	75	200	27	44
PM352-ING114	1"1/4	80	200	32	49

Promec FITTINGS

PM370

DISTRIBUTORI IN AISI 304 PER PORTATE ELEVATE 180°C, 15 Bar.
AISI 304 STAINLESS STEEL MANIFOLD FOR HIGH FLOW 180°C 15 Bar.

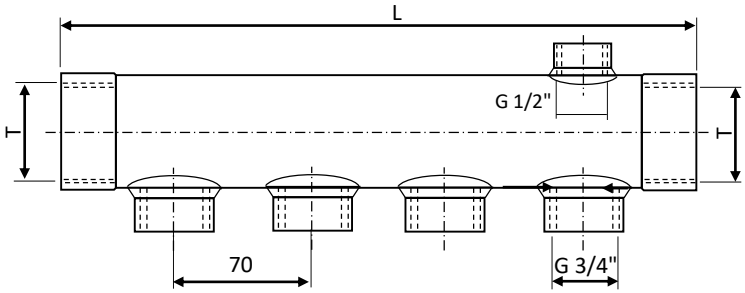

Codice-Code	N. USCITE N. GATES	H	H1	L	L1	ØT
PM370-ING112-04XG034-SN	4	83	59	291	125	G1"1/2
PM370-ING112-06XG034-SN	6			431		
PM370-ING112-08XG034-SN	8			571		
PM370-ING112-10XG034-SN	10			711		
PM370-ING112-12XG034-SN	12			851		
PM370-ING112-14XG034-SN	14			991		
PM370-ING200-04XG034-SN	4	87	63	299	135	G2"
PM370-ING200-06XG034-SN	6			439		
PM370-ING200-08XG034-SN	8			579		
PM370-ING200-10XG034-SN	10			719		
PM370-ING200-12XG034-SN	12			859		
PM370-ING200-14XG034-SN	14			999		

PC2264-G112
PC2264-G200

Tappo ottone nichelato con O-Ring
Nickel-plated brass plug with O-Ring

PM372

Staffa doppia (coppia)
Double bracket (twin

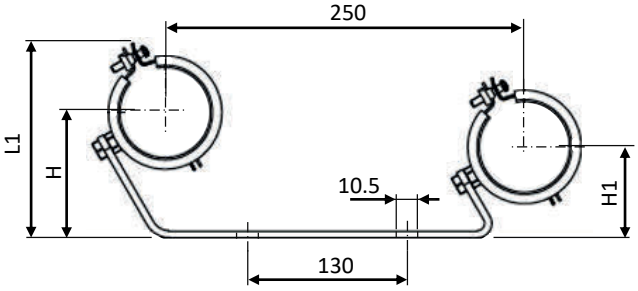

PM379

Fascia isolante per collettore
Thermo-insulating belt for

	Codice-Code	N. USCITE N. GATES
Fascia intermedia 1"1/2 - Intermediate belt 1"1/2	PM379-ING112-I	3
Fascia terminale 1"1/2 - termina belt 1"1/2	PM379-ING112-T	3
Fascia intermedia 2" - Intermediate belt 2"	PM379-ING200-I	3
Fascia terminale 2" - Terminal belt 2"	PM379-ING200-T	3

PM902

COLLETTORE IN ALLUMINIO PER CIRCUITI OLEODINAMICI. Temp. esercizio -10 / +90°C. Pressione max. 200 Bar.
HIGH PRESSURE ALUMINIUM MANIFOLD. Temperature range -10 / +90°C. Max. working pressure 200 Bar.

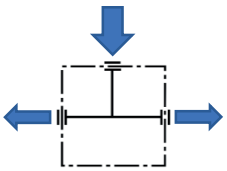

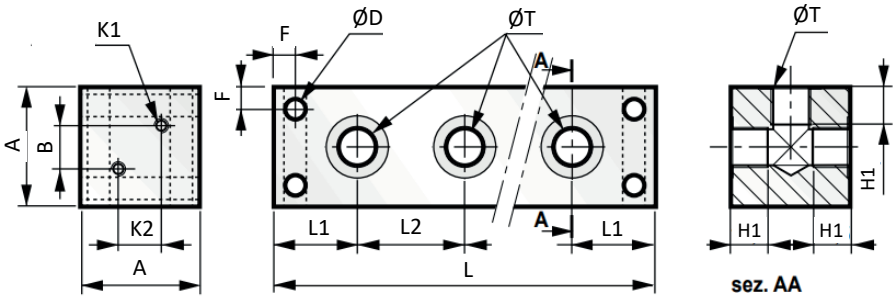

Codice-Code	N. USCITE N. GATES	A	B	D	F	L	L1	L2	K	K1	ØT	ØT1
PM902-2XG014	2x2	40	28	6,5	6	100	30	40	(2x) M5x10	16	G1/4"	-
PM902-4XG014	4x2	40	28	6,5	6	180	30	40	(2x) M5x10	16	G1/4"	-
PM902-6XG014	6x2	40	28	6,5	6	260	30	40	(2x) M5x10	16	G1/4"	-
PM902-2XG038	2x2	50	34	8	8	115	35	45	(2x) M6x12	18	G3/8"	-
PM902-4XG038	4x2	50	34	8	8	205	35	45	(2x) M6x12	18	G3/8"	-
PM902-6XG038	6x2	50	34	8	8	295	35	45	(2x) M6x12	18	G3/8"	-
PM902-2XG012	2x2	60	40	10	8,5	125	35	55	(4x) M6x12	24	G1/2"	-
PM902-4XG012	4x2	60	40	10	8,5	235	35	55	(4x) M6x12	24	G1/2"	-
PM902-6XG012	6x2	60	40	10	8,5	345	35	55	(4x) M6x12	24	G1/2"	-

PM901

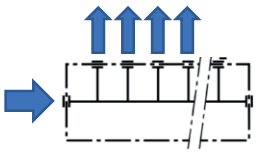

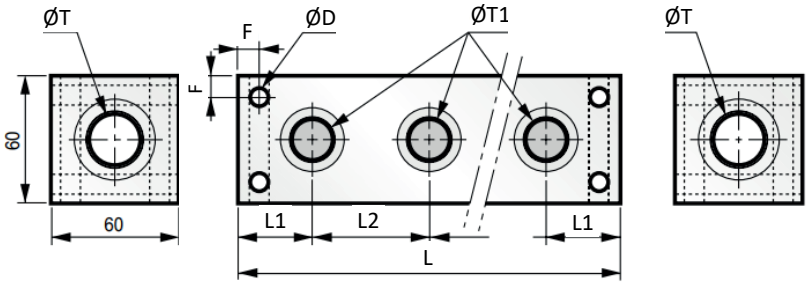

Codice-Code	N. USCITE N. GATES	A	B	D	F	L	L1	L2	K	K1	ØT	ØT1
PM901-ING014-2XG018	2	35	25	4,5	5	70	20	30	-	-	G1/8"	G1/4"
PM901-ING014-4XG018	4	35	25	4,5	5	130	20	30	-	-	G1/8"	G1/4"
PM901-ING038-2XG014	2	40	28	6,5	6	100	30	40	-	-	G1/4"	G3/8"
PM901-ING038-4XG014	4	40	28	6,5	6	180	30	40	-	-	G1/4"	G3/8"
PM901-ING038-6XG014	6	40	28	6,5	6	260	30	40	-	-	G1/4"	G3/8"
PM901-ING012-2XG038	2	50	34	8	8	115	35	45	-	-	G3/8"	G1/2"
PM901-ING012-4XG038	4	50	34	8	8	205	35	45	-	-	G3/8"	G1/2"
PM901-ING012-6XG038	6	50	34	8	8	295	35	45	-	-	G3/8"	G1/2"
PM901-ING034-2XG012	2	60	40	10	8,5	125	35	55	-	-	G1/2"	G3/4"
PM901-ING034-4XG012	4	60	40	10	8,5	235	35	55	-	-	G1/2"	G3/4"
PM901-ING034-6XG012	6	60	40	10	8,5	345	35	55	-	-	G1/2"	G3/4"

PIASTRE A 3+3 INNESTI CON PASSAGGIO Ø6
3+3 PLUG PLATES WITH FLOW PASSAGE Ø6 **PM1306-06** **202**

PIASTRE A 3+3 INNESTI CON PASSAGGIO Ø9
3+3 PLUG PLATES WITH FLOW PASSAGE Ø9 **PM1309-06** **204**

PIASTRE A 5+5 INNESTI CON PASSAGGIO Ø9
5+5 PLUG PLATES WITH FLOW PASSAGE Ø9 **PM1309-10** **206**

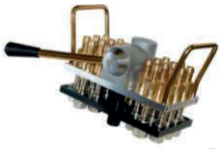

PIASTRE A 6+6 INNESTI CON PASSAGGIO Ø9
6+6 PLUG PLATES WITH FLOW PASSAGE Ø9 **PM1309-12** **208**

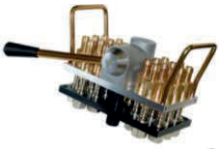

PIASTRE A 10+10 INNESTI CON PASSAGGIO Ø9
10+10 PLUG PLATES WITH FLOW PASSAGE Ø9 **PM1309-20** **210**

PIASTRE A 6+6 INNESTI CON PASSAGGIO Ø12
6+6 PLUG PLATES WITH FLOW PASSAGE Ø12 **PM1312-12** **212**

PIASTRE A 10+10 INNESTI CON PASSAGGIO Ø12
10+10 PLUG PLATES WITH FLOW PASSAGE Ø12 **PM1312-20** **214**

PIASTRE A 6+6 INNESTI CON PASSAGGIO Ø16
6+6 PLUG PLATES WITH FLOW PASSAGE Ø16 **PM1316-12** **216**

Promec FITTINGS

PM1306

PIASTRE CON **PASSAGGIO Ø6 – 3+3 POSIZIONI**
PLATES WITH **FLOW PASSAGE Ø6 3+3 GATES**

PIASTRA LATO PRESSA – INJECTION MACHINE PLATE

Ø6 - 3+3

PM1306-06-08-MT

PIASTRA CON 6 PORTAGOMMA PER TUBO Ø8
PLATE WITH 6 HOSE TAIL PLUG Ø8

PM1306-06-10-MT

PIASTRA CON 6 PORTAGOMMA PER TUBO Ø10
PLATE WITH 6 HOSE TAIL PLUG Ø10

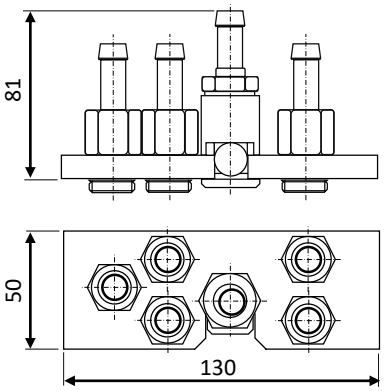

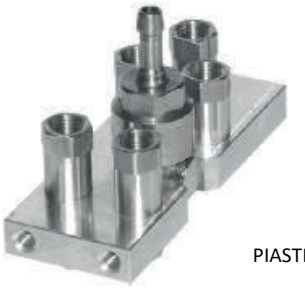

PM1306-06-G014-MF

PIASTRA CON 6 RACCORDI FILETTO FEMMINA G1/4“
PLATE WITH 6 FEMALE PLUGS G1/4"

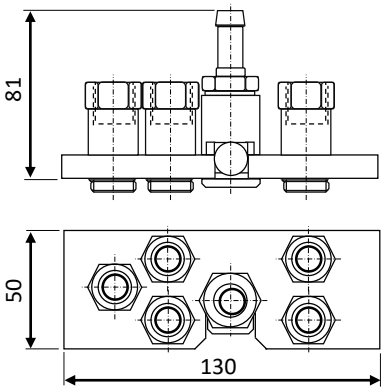

PM1306-06-00-MB

PIASTRA BASE, SENZA RACCORDI – BASE PLATE WITHOUT PLUGS

COMPONENTI SINGOLI – SINGLE COMPONENTS

PCM1301-06-10

RACCORDO EASYLOCK PER TUBO Ø9,5 mm. CON VALVOLA
EASYLOCK PLUG HOSE Ø9,5 mm. WITH VALVE

PCM1303-06-08

RACCORDO PORTAGOMMA TUBO Ø8 mm. CON VALVOLA
HOSE TAIL PLUG Ø8 mm. WITH VALVE

PCM1303-06-10

RACCORDO PORTAGOMMA TUBO Ø10 mm. CON VALVOLA
HOSE TAIL PLUG HOSE Ø10 mm. WITH VALVE

PCM1349-06-G014

RACCORDO DRITTO FIL. FEMMINA 1/4“ BSPP CON VALVOLA
FEMALE THREADED PLUG 1/4“ BSPP WITH VALVE

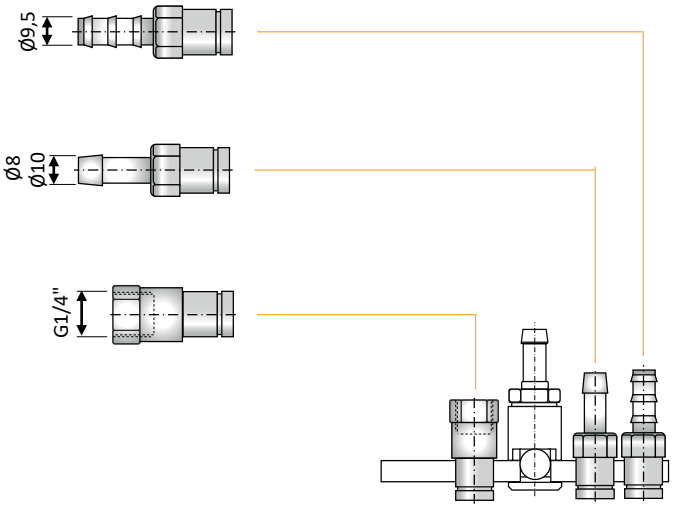

PIASTRA PARTE STAMPO – MOULD SIDE PLATE

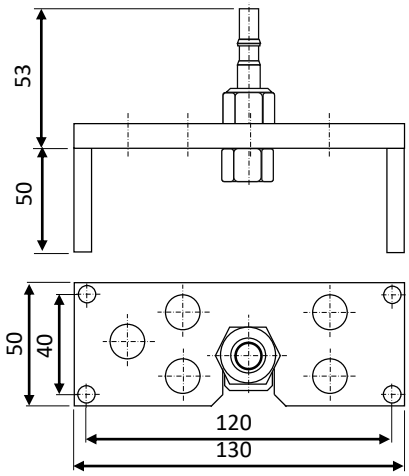

PM1306-06-00-SB

PIASTRA BASE CON PIEDINI E INNESTO PIASTRA
BASE PLATE WITH SPACERS AND PLATE PLUG

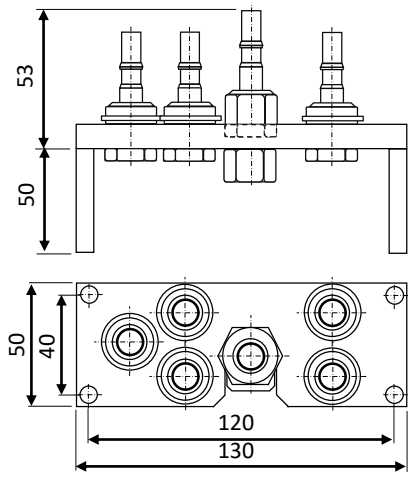

PM1306-06-06-SBXV

PIASTRA CON INNESTI RAPIDI SENZA VALVOLA
PLATE WITH QUICK COUPLINGS WITHOUT VALVE

PM1306-06-06-SBYV

PIASTRA CON INNESTI RAPIDI CON VALVOLA
PLATE WITH QUICK COUPLINGS WITH VALVE

COMPONENTI SINGOLI – SINGLE COMPONENTS

PCM1319-06-G014-BYV

INNESTO RAPIDO CON VALVOLA DI COLLEGAMENTO ALLA PARTE MOBILE – QUICK COUPLING WITH VALVE FOR CONNECTING TO THE MOBILE PLATE

PCM1319-06-G014-BXV

INNESTO RAPIDO SENZA VALVOLA DI COLLEGAMENTO ALLA PARTE MOBILE – QUICK COUPLING WITHOUT VALVE FOR CONNECTING TO THE MOBILE PLATE

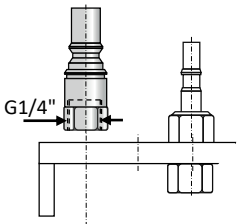

PC2247-10-G014

RACCORDO EASYLOCK 90° PER TUBO Ø9,5 mm - 90° EASYLOCK PLUG HOSE Ø9,5 mm.

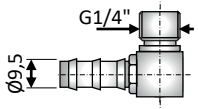

PC2248-08-G014

RACCORDO PORTAGOMMA 90° TUBO Ø8 mm. - 90° HOSE TAIL PLUG Ø8 mm.

PC2248-10-G014

RACCORDO PORTAGOMMA 90° TUBO Ø10 mm. - 90° HOSE TAIL PLUG Ø10 mm.

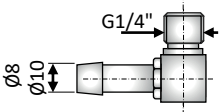

PC2249-G014-L020

RACCORDO DRITTO FIL. FEMMINA G1/4" - G1/4" FEMALE THREADED EXTENSION PLUG

PC2249-G014-L040

RACCORDO DRITTO FIL. FEMMINA G1/4" - G1/4" FEMALE THREADED EXTENSION PLUG

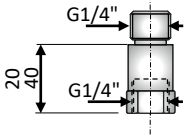

Promec FITTINGS

PM1309

PIASTRACON PASSAGGIO Ø9 – 3+3 POSIZIONI
PLATE WITH FLOW PASSAGE Ø9 3+3 GATES

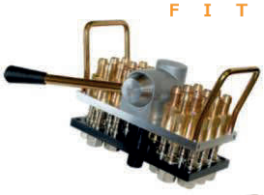

Ø9 - 3+3

PIASTRA LATO PRESSA – INJECTION MACHINE PLATE

PM1309-06-10-MP

PIASTRA 6 INNESTI EASYLOCK CON VALVOLA TUBO Ø9,5 - PLATE WITH 6 EASYLOCK PLUG Ø9,5 WITH VALVE

PM1309-06-13-MP

PIASTRA 6 INNESTI EASYLOCK CON VALVOLA PER TUBO Ø12,7 – PLATE WITH 6 EASYLOCK PLUG Ø12,7 WITH VALVE

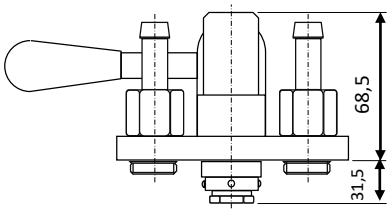

PM1309-06-10-MT

PIASTRA 6 INNESTI CON PORTAGOMMA E VALVOLA PER TUBO Ø10 – PLATE WITH 6 HOSE TAIL PLUG Ø10 WITH VALVE

PM1309-06-12-MT

PIASTRA 6 INNESTI PORTAGOMMA CON VALVOLA PER TUBO Ø12 –PLATE WITH 6 HOSE TAIL PLUG Ø12 WITH VALVE

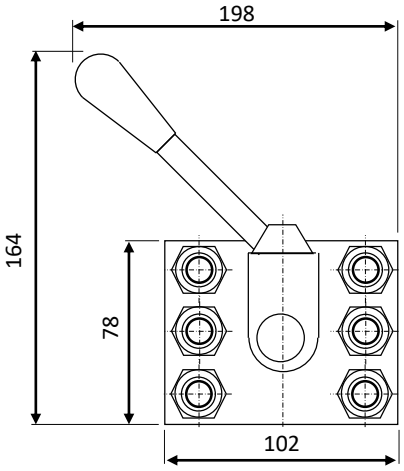

PM1309-06-G038-MF

PIASTRA 6 INNESTI CON FILETTO FEMMINA 3/8" BSPP CON VALVOLA - PLATE WITH 6 X 3/8" BSPP FEMALE TRHEADED PLUG WITH VALVE

PM1309-06-00-MB

PIASTRA BASE, SENZA RACCORDI – BASE PLATE WITHOUT PLUGS

COMPONENTI SINGOLI – SINGLE COMPONENTS

PCM1301-09-10

RACCORDO EASYLOCK PER TUBO Ø9,5 mm. CON VALVOLA
EASYLOCK PLUG HOSE Ø9,5 mm. WITH VALVE

PCM1301-09-13

RACCORDO EASYLOCK PER TUBO Ø9,5 mm. CON VALVOLA
EASYLOCK PLUG HOSE Ø9,5 mm. WITH VALVE

PCM1303-09-10

RACCORDO PORTAGOMMA TUBO Ø10 mm.
HOSE TAIL PLUG Ø10 mm. WITH VALVE

PCM1303-09-12

RACCORDO PORTAGOMMA TUBO Ø12 mm.
HOSE TAIL PLUG HOSE Ø12 mm. WITH VALVE

PCM1349-09-G038

RACCORDO DRITTO FIL. FEMMINA 3/8" BSPP
FEMALE THREADED PLUG 3/8" BSPP WITH VALVE

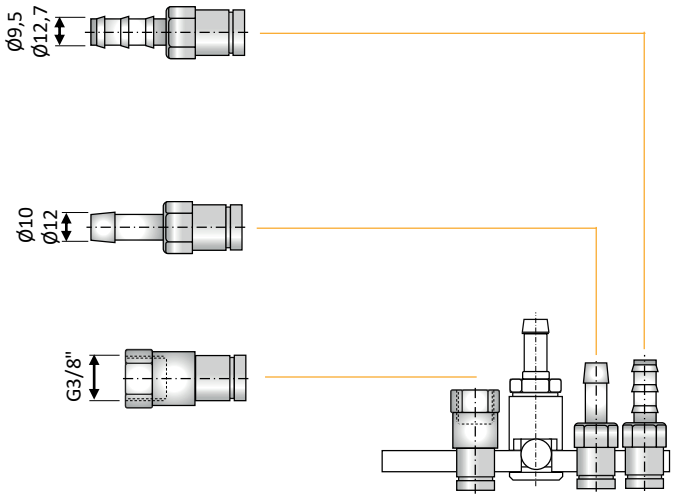

COMPONENTI PARTE STAMPO – MOULD SIDE COMPONENTS

PM1309-06-00-SB

PIASTRA BASE CON PIEDINI E INNESTO PIASTRA
BASE PLATE WITH SPACERS AND PLATE PLUG

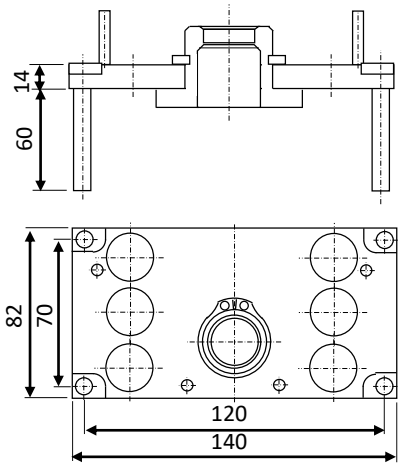

PM1309-06-06-SBXV

PIASTRA CON INNESTI RAPIDI SENZA VALVOLA
PLATE WITH QUICK COUPLINGS WITHOUT VALVE

PM1309-06-06-SBYV

PIASTRA CON INNESTI RAPIDI CON VALVOLA
PLATE WITH QUICK COUPLINGS WITH VALVE

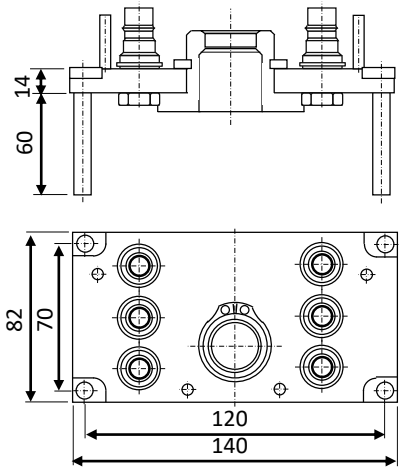

COMPONENTI SINGOLI – SINGLE COMPONENTS

PCM1319-09-G038-BYV

INNESTO RAPIDO DI COLLEGAMENTO ALLA PARTE MOBILE CON VALVOLA
QUICK COUPLING WITH VALVE FOR CONNECTING TO THE MOBILE PLATE

PCM1319-09-G038-BXV

INNESTO RAPIDO DI COLLEGAMENTO ALLA PARTE MOBILE SENZA VALVOLA
QUICK COUPLING WITHOUT VALVE FOR CONNECTING TO THE MOBILE PLATE

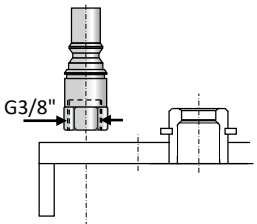

PC2247-10-G038

RACCORDO EASYLOCK 90° PER TUBO Ø9,5 mm - 90° EASYLOCK PLUG HOSE Ø9,5 mm.

PC2247-13-G038

RACCORDO EASYLOCK 90° PER TUBO Ø12,7 mm. - 90° EASYLOCK PLUG HOSE Ø12,7 mm.

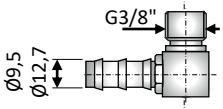

PC2248-10-G038

RACCORDO PORTAGOMMA 90° TUBO Ø10 mm. - 90° HOSE TAIL PLUG Ø10 mm.

PC2248-12-G038

RACCORDO PORTAGOMMA 90° TUBO Ø12 mm. - 90° HOSE TAIL PLUG Ø12 mm.

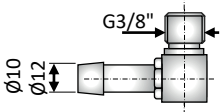

PC2249-G038-L020

RACCORDO DRITTO FIL. FEMMINA G3/8“ – G3/8“ FEMALE THREADED EXTENSION PLUG

PC2249-G038-L040

RACCORDO DRITTO FIL. FEMMINA G3/8“ – G3/8“ FEMALE THREADED EXTENSION PLUG

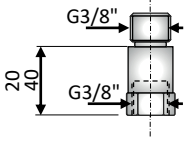

Promec FITTINGS

PM1309

PIASTRACON PASSAGGIO Ø9 – 5+5 POSIZIONI
PLATE WITH FLOW PASSAGE Ø9 5+5 GATES

PIASTRA LATO PRESSA – INJECTION MACHINE PLATE

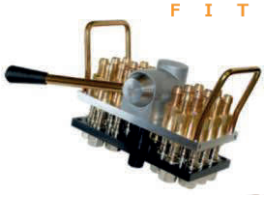

Ø9 – 5+5

PM1309-10-10-MP

PIASTRA 10 INNESTI EASYLOCK CON VALVOLA TUBO Ø9,5 - PLATE WITH 10 EASYLOCK PLUG Ø9,5 WITH VALVE

PM1309-10-13-MP

PIASTRA 10 INNESTI EASYLOCK CON VALVOLA PER TUBO Ø12,7 – PLATE WITH 10 EASYLOCK PLUG Ø12,7 WITH VALVE

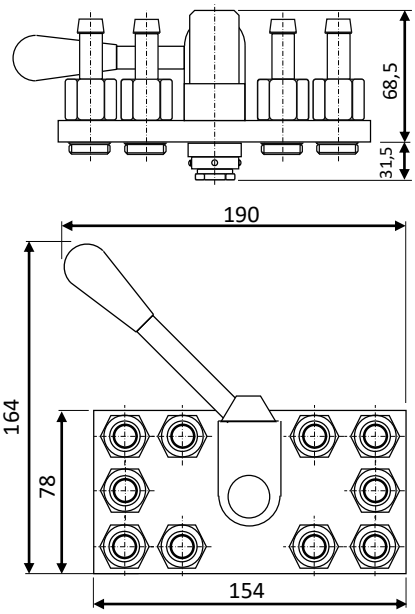

PM1309-10-10-MT

PIASTRA 10 INNESTI CON PORTAGOMMA E VALVOLA PER TUBO Ø10 – PLATE WITH 10 HOSE TAIL PLUG Ø10 WITH VALVE

PM1309-10-12-MT

PIASTRA 10 INNESTI PORTAGOMMA CON VALVOLA PER TUBO Ø12 –PLATE WITH 10 HOSE TAIL PLUG Ø12 WITH VALVE

PM1309-10-G038-MF

PIASTRA 10 INNESTI CON FILETTO FEMMINA 3/8" BSPP CON VALVOLA - PLATE WITH 10 X 3/8" BSPP FEMALE TRHEADED PLUG WITH VALVE

PM1309-10-00-MB

PIASTRA BASE, SENZA RACCORDI – BASE PLATE WITHOUT PLUGS

COMPONENTI SINGOLI – SINGLE COMPONENTS

PCM1301-09-10

RACCORDO EASYLOCK PER TUBO Ø9,5 mm. CON VALVOLA
EASYLOCK PLUG HOSE Ø9,5 mm. WITH VALVE

PCM1301-09-13

RACCORDO EASYLOCK PER TUBO Ø9,5 mm. CON VALVOLA
EASYLOCK PLUG HOSE Ø9,5 mm. WITH VALVE

PCM1303-09-10

RACCORDO PORTAGOMMA TUBO Ø10 mm.
HOSE TAIL PLUG Ø10 mm. WITH VALVE

PCM1303-09-12

RACCORDO PORTAGOMMA TUBO Ø12 mm.
HOSE TAIL PLUG HOSE Ø12 mm. WITH VALVE

PCM1349-09-G038

RACCORDO DRITTO FIL. FEMMINA 3/8" BSPP
FEMALE THREADED PLUG 3/8" BSPP WITH VALVE

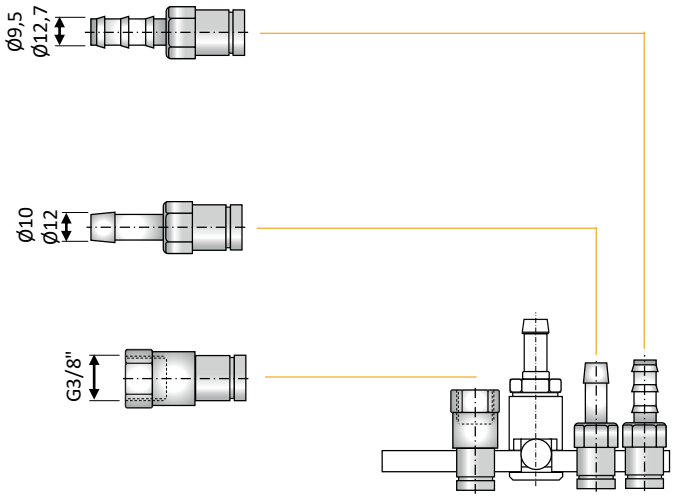

COMPONENTI PARTE STAMPO – MOULD SIDE COMPONENTS

PM1309-10-SC-BXV

PIASTRA CON 10 NIPPLI MASCHIO SENZA VALVOLA
PLATE WITH 10 PLUGS WITHOUT VALVE

PM1309-10-SC-BYV

PIASTRA CON 10 NIPPLI MASCHIO CON VALVOLA
PLATE WITH 10 PLUGS WITH VALVE

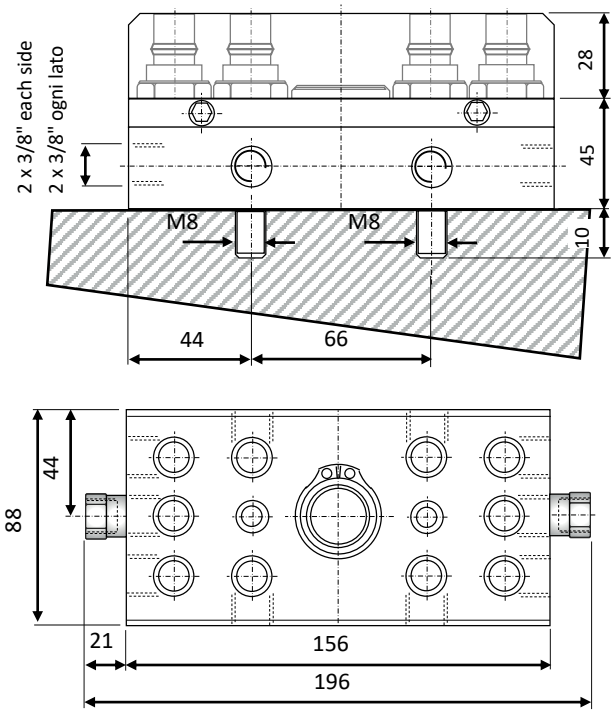

Promec FITTINGS

PM1309

PIASTRACON PASSAGGIO Ø9 – 6+6 POSIZIONI
PLATE WITH FLOW PASSAGE Ø9 6+6 GATES

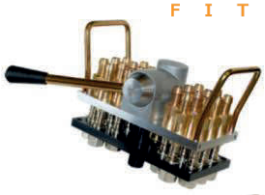

Ø9 – 6+6

PIASTRA LATO PRESSA – INJECTION MACHINE PLATE

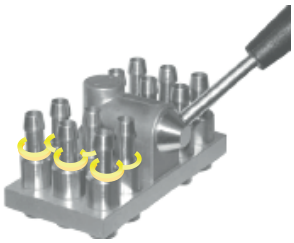

PM1309-12-10-MP
PIASTRA 12 INNESTI EASYLOCK CON VALVOLA TUBO Ø9,5 - PLATE WITH 12 EASYLOCK PLUG Ø9,5 WITH VALVE

PM1309-12-13-MP
PIASTRA 12 INNESTI EASYLOCK CON VALVOLA PER TUBO Ø12,7 – PLATE WITH 12 EASYLOCK PLUG Ø12,7 WITH VALVE

PM1309-12-10-MT
PIASTRA 12 INNESTI CON PORTAGOMMA E VALVOLA PER TUBO Ø10 – PLATE WITH 12 HOSE TAIL PLUG Ø10 WITH VALVE

PM1309-12-12-MT
PIASTRA 12 INNESTI PORTAGOMMA CON VALVOLA PER TUBO Ø12 –PLATE WITH 12 HOSE TAIL PLUG Ø12 WITH VALVE

PM1309-12-G038-MF
PIASTRA 12 INNESTI CON FILETTO FEMMINA G3/8" CON VALVOLA - PLATE WITH 12 X G3/8" FEMALE TRHEADED PLUG WITH VALVE

PM1309-12-G100-MF
PIASTRA 12 INNESTI CON VALVOLA ED UN INGRESSO FEMMINA G1" - PLATE WITH 12 X PLUGS WITH VALVE AND ONE INLET WITH G3/8" FEMALE THREAD

PM1309-12-00-MB
PIASTRA BASE, SENZA RACCORDI – BASE PLATE WITHOUT PLUGS

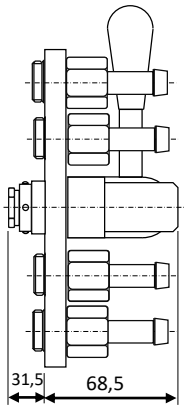

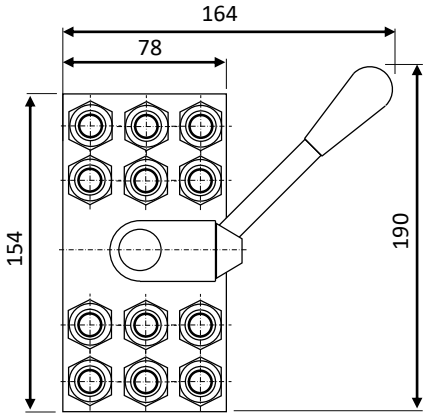

COMPONENTI SINGOLI – SINGLE COMPONENTS

PCM1301-09-10
RACCORDO EASYLOCK PER TUBO Ø9,5 mm. CON VALVOLA
EASYLOCK PLUG HOSE Ø9,5 mm. WITH VALVE

PCM1301-09-13
RACCORDO EASYLOCK PER TUBO Ø9,5 mm. CON VALVOLA
EASYLOCK PLUG HOSE Ø9,5 mm. WITH VALVE

PCM1303-09-10
RACCORDO PORTAGOMMA TUBO Ø10 mm.
HOSE TAIL PLUG Ø10 mm. WITH VALVE

PCM1303-09-12
RACCORDO PORTAGOMMA TUBO Ø12 mm.
HOSE TAIL PLUG HOSE Ø12 mm. WITH VALVE

PCM1349-09-G038
RACCORDO DRITTO FIL. FEMMINA 3/8" BSPP
FEMALE THREADED PLUG 3/8" BSPP WITH VALVE

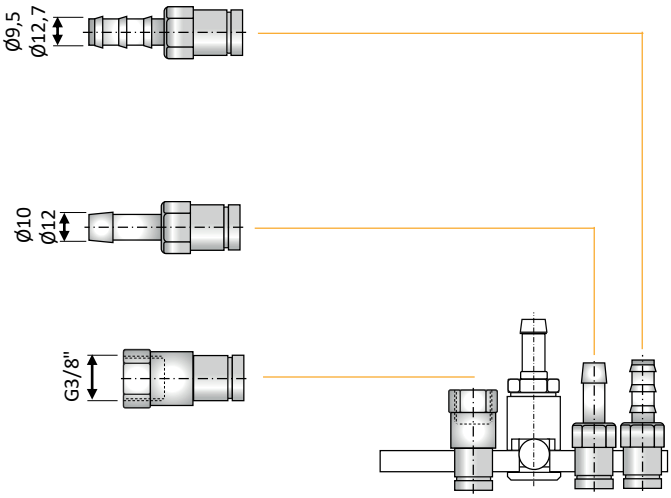

COMPONENTI PARTE STAMPO – MOULD SIDE COMPONENTS

PM1309-12-00-SB

PIASTRA BASE CON PIEDINI E
INNESTO PIASTRA - BASE PLATE
WITH SPACERS AND PLATE PLUG

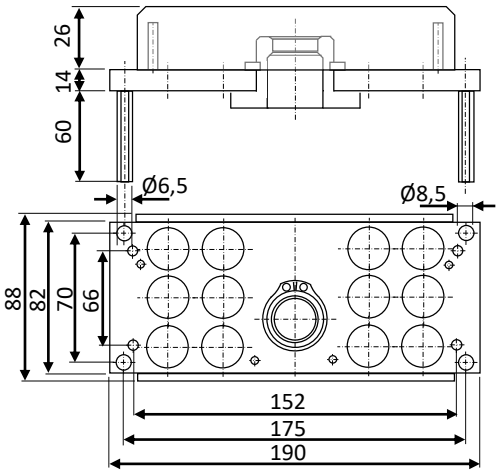

PM1309-12-12-SBXV

PIASTRA CON INNESTI RAPIDI SENZA VALVOLA
PLATE WITH QUICK COUPLINGS WITHOUT VALVE

PM1309-12-12-SBYV

PIASTRA CON INNESTI RAPIDI CON VALVOLA
PLATE WITH QUICK COUPLINGS WITH VALVE

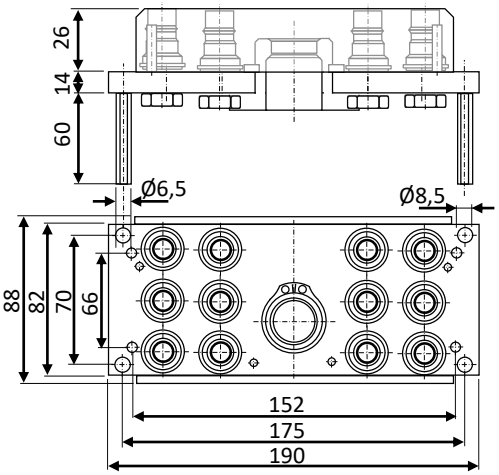

COMPONENTI SINGOLI – SINGLE COMPONENTS

PCM1319-09-G038-BYV

INNESTO RAPIDO DI COLLEGAMENTO ALLA PARTE MOBILE CON VALVOLA
QUICK COUPLING WITH VALVE FOR CONNECTING TO THE MOBILE PLATE

PCM1319-09-G038-BXV

INNESTO RAPIDO DI COLLEGAMENTO ALLA PARTE MOBILE SENZA VALVOLA
QUICK COUPLING WITHOUT VALVE FOR CONNECTING TO THE MOBILE PLATE

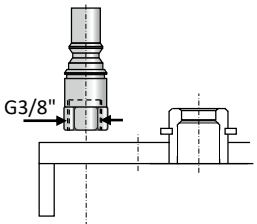

PC2247-10-G038

RACCORDO EASYLOCK 90° PER TUBO Ø9,5 mm - 90° EASYLOCK PLUG HOSE Ø9,5 mm.

PC2247-13-G038

RACCORDO EASYLOCK 90° PER TUBO Ø12,7 mm. - 90° EASYLOCK PLUG HOSE Ø12,7 mm.

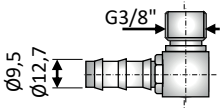

PC2248-10-G038

RACCORDO PORTAGOMMA 90° TUBO Ø10 mm. - 90° HOSE TAIL PLUG Ø10 mm.

PC2248-12-G038

RACCORDO PORTAGOMMA 90° TUBO Ø12 mm. - 90° HOSE TAIL PLUG Ø12 mm.

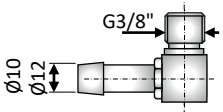

PC2249-G038-L020

RACCORDO DRITTO FIL. FEMMINA G3/8“ – G3/8“ FEMALE THREADED EXTENSION PLUG

PC2249-G038-L040

RACCORDO DRITTO FIL. FEMMINA G3/8“ – G3/8“ FEMALE THREADED EXTENSION PLUG

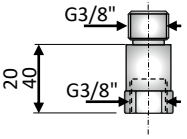

Promec FITTINGS

PM1309

PIASTRACON PASSAGGIO Ø9 – 10+10 POSIZIONI
PLATE WITH FLOW PASSAGE Ø9 10+10 GATES

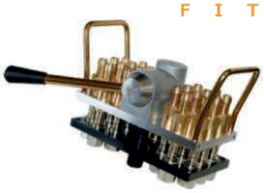

Ø9 – 10+10

PIASTRA LATO PRESSA – INJECTION MACHINE PLATE

PM1309-20-10-MP
PIASTRA 20 INNESTI EASYLOCK CON VALVOLA TUBO Ø9,5 - PLATE WITH 20 EASYLOCK PLUG Ø9,5 WITH VALVE

PM1309-20-13-MP
PIASTRA 20 INNESTI EASYLOCK CON VALVOLA PER TUBO Ø12,7 – PLATE WITH 20 EASYLOCK PLUG Ø12,7 WITH VALVE

PM1309-20-10-MT
PIASTRA 20 INNESTI CON PORTAGOMMA E VALVOLA PER TUBO Ø10 – PLATE WITH 20 HOSE TAIL PLUG Ø10 WITH VALVE

PM1309-20-12-MT
PIASTRA 20 INNESTI PORTAGOMMA CON VALVOLA PER TUBO Ø12 –PLATE WITH 20 HOSE TAIL PLUG Ø12 WITH VALVE

PM1309-20-G038-MF
PIASTRA 20 INNESTI CON FILETTO FEMMINA G3/8" CON VALVOLA - PLATE WITH 20 X G3/8" FEMALE TRHEADED PLUG WITH VALVE

PM1309-20-G100-MF
PIASTRA 20 INNESTI CON VALVOLA ED UN INGRESSO FEMMINA G1" - PLATE WITH 20 X PLUGS WITH VALVE AND ONE INLET WITH G3/8" FEMALE THREAD

PM1309-20-00-MB
PIASTRA BASE, SENZA RACCORDI – BASE PLATE WITHOUT PLUGS

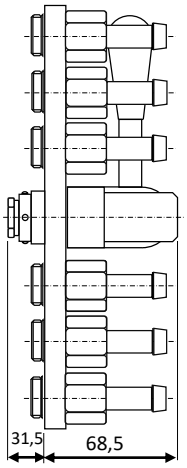

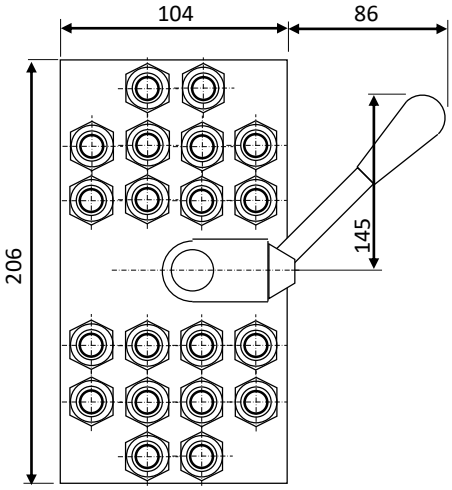

COMPONENTI SINGOLI – SINGLE COMPONENTS

PCM1301-09-10
RACCORDO EASYLOCK PER TUBO Ø9,5 mm. CON VALVOLA
EASYLOCK PLUG HOSE Ø9,5 mm. WITH VALVE

PCM1301-09-13
RACCORDO EASYLOCK PER TUBO Ø9,5 mm. CON VALVOLA
EASYLOCK PLUG HOSE Ø9,5 mm. WITH VALVE

PCM1303-09-10
RACCORDO PORTAGOMMA TUBO Ø10 mm.
HOSE TAIL PLUG Ø10 mm. WITH VALVE

PCM1303-09-12
RACCORDO PORTAGOMMA TUBO Ø12 mm.
HOSE TAIL PLUG HOSE Ø12 mm. WITH VALVE

PCM1349-09-G038
RACCORDO DRITTO FIL. FEMMINA 3/8" BSPP
FEMALE THREADED PLUG 3/8" BSPP WITH VALVE

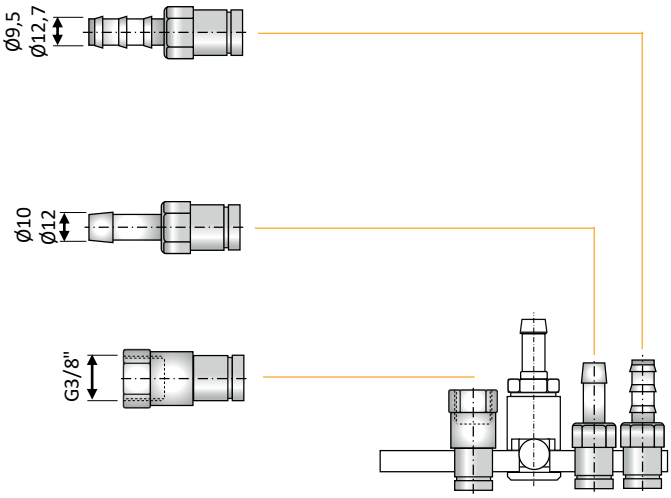

COMPONENTI PARTE STAMPO – MOULD SIDE COMPONENTS

PM1309-20-00-SB

PIASTRA BASE CON PIEDINI E
INNESTO PIASTRA - BASE PLATE
WITH SPACERS AND PLATE PLUG

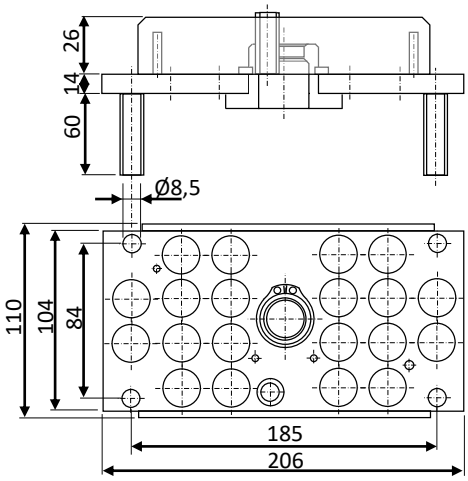

PM1309-20-20-SBXV

PIASTRA CON INNESTI RAPIDI SENZA VALVOLA
PLATE WITH QUICK COUPLINGS WITHOUT VALVE

PM1309-20-20-SBYV

PIASTRA CON INNESTI RAPIDI CON VALVOLA
PLATE WITH QUICK COUPLINGS WITH VALVE

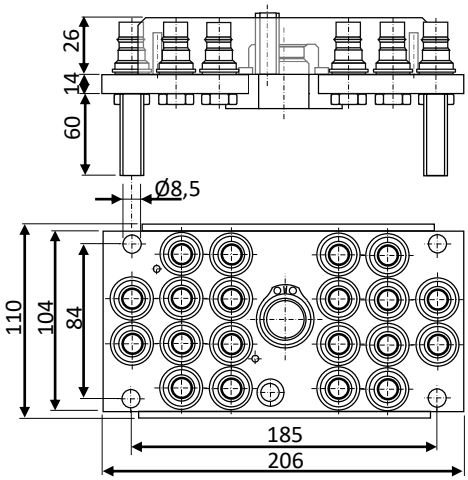

COMPONENTI SINGOLI – SINGLE COMPONENTS

PCM1319-09-G038-BYV

INNESTO RAPIDO DI COLLEGAMENTO ALLA PARTE MOBILE CON VALVOLA
QUICK COUPLING WITH VALVE FOR CONNECTING TO THE MOBILE PLATE

PCM1319-09-G038-BXV

INNESTO RAPIDO DI COLLEGAMENTO ALLA PARTE MOBILE SENZA VALVOLA
QUICK COUPLING WITHOUT VALVE FOR CONNECTING TO THE MOBILE PLATE

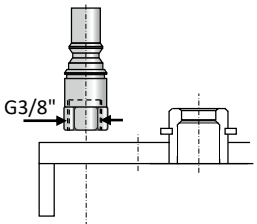

PC2247-10-G038

RACCORDO EASYLOCK 90° PER TUBO Ø9,5 mm - 90° EASYLOCK PLUG HOSE Ø9,5 mm.

PC2247-13-G038

RACCORDO EASYLOCK 90° PER TUBO Ø12,7 mm. - 90° EASYLOCK PLUG HOSE Ø12,7 mm.

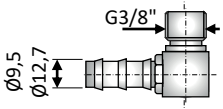

PC2248-10-G038

RACCORDO PORTAGOMMA 90° TUBO Ø10 mm. - 90° HOSE TAIL PLUG Ø10 mm.

PC2248-12-G038

RACCORDO PORTAGOMMA 90° TUBO Ø12 mm. - 90° HOSE TAIL PLUG Ø12 mm.

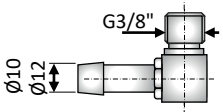

PC2249-G038-L020

RACCORDO DRITTO FIL. FEMMINA G3/8“ – G3/8“ FEMALE THREADED EXTENSION PLUG

PC2249-G038-L040

RACCORDO DRITTO FIL. FEMMINA G3/8“ – G3/8“ FEMALE THREADED EXTENSION PLUG

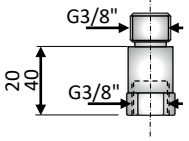

Promec FITTINGS

PM1312

PIASTRACON PASSAGGIO Ø12 – 6+6 POSIZIONI
PLATE WITH FLOW PASSAGE Ø12 6+6 GATES

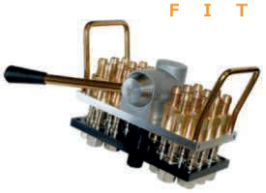

Ø12 – 6+6

PIASTRA LATO PRESSA – INJECTION MACHINE PLATE

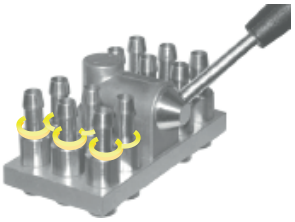

PM1312-12-16-MP
PIASTRA 12 INNESTI EASYLOCK CON VALVOLA TUBO Ø16 - PLATE WITH 12 EASYLOCK PLUG Ø16 WITH VALVE

PM1312-12-16-MT
PIASTRA 12 INNESTI CON PORTAGOMMA E VALVOLA PER TUBO Ø16 – PLATE WITH 12 HOSE TAIL PLUG Ø16 WITH VALVE

PM1312-12-G012-MF
PIASTRA 20 INNESTI CON FILETTO FEMMINA G1/2" CON VALVOLA - PLATE WITH 20 X G1/2" FEMALE TRHEADED PLUG WITH VALVE

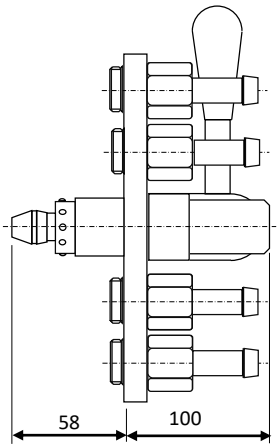

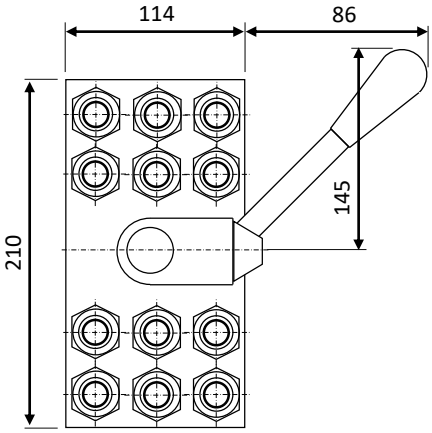

PM1312-12-00-MB
PIASTRA BASE, SENZA RACCORDI – BASE PLATE WITHOUT PLUGS

COMPONENTI SINGOLI – SINGLE COMPONENTS

PCM1301-12-16
RACCORDO EASYLOCK PER TUBO Ø16 mm. CON VALVOLA
EASYLOCK PLUG HOSE Ø16 mm. WITH VALVE

PCM1303-12-16
RACCORDO PORTAGOMMA TUBO Ø16 mm.
HOSE TAIL PLUG HOSE Ø12 mm. WITH VALVE

PCM1349-12-G012
RACCORDO DRITTO FIL. FEMMINA 1/2" BSPP
FEMALE THREADED PLUG 1/2" BSPP WITH VALVE

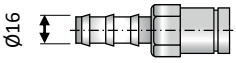

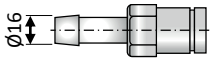

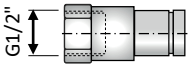

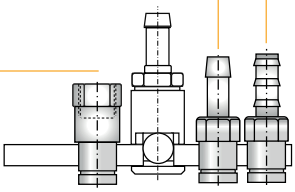

COMPONENTI PARTE STAMPO – MOULD SIDE COMPONENTS

PM1312-12-00-SB

PIASTRA BASE CON PIEDINI E
INNESTO PIASTRA - BASE PLATE
WITH SPACERS AND PLATE PLUG

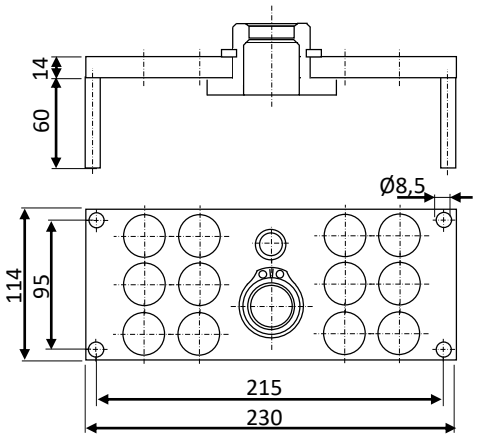

PM1312-12-12-SBXV

PIASTRA CON INNESTI RAPIDI SENZA VALVOLA
PLATE WITH QUICK COUPLINGS WITHOUT VALVE

PM1312-12-12-SBYV

PIASTRA CON INNESTI RAPIDI CON VALVOLA
PLATE WITH QUICK COUPLINGS WITH VALVE

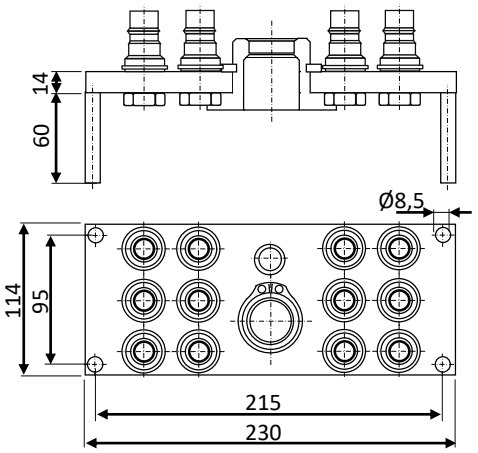

COMPONENTI SINGOLI – SINGLE COMPONENTS

PCM1319-12-G012-BYV

INNESTO RAPIDO DI COLLEGAMENTO ALLA PARTE MOBILE CON VALVOLA
QUICK COUPLING WITH VALVE FOR CONNECTING TO THE MOBILE PLATE

PCM1319-12-G012-BXV

INNESTO RAPIDO DI COLLEGAMENTO ALLA PARTE MOBILE SENZA VALVOLA
QUICK COUPLING WITHOUT VALVE FOR CONNECTING TO THE MOBILE PLATE

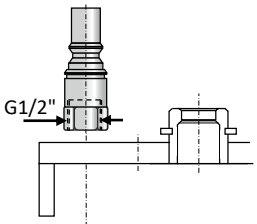

PC2247-13-G012

RACCORDO EASYLOCK 90° PER TUBO Ø12,7 mm. - 90° EASYLOCK PLUG HOSE Ø12,7 mm.

PC2247-16-G012

RACCORDO EASYLOCK 90° PER TUBO Ø16 mm. - 90° EASYLOCK PLUG HOSE Ø16 mm.

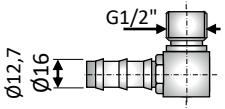

PC2248-13-G012

RACCORDO PORTAGOMMA 90° TUBO Ø13 mm. - 90° HOSE TAIL PLUG Ø13 mm.

PC2248-16-G012

RACCORDO PORTAGOMMA 90° TUBO Ø16 mm. - 90° HOSE TAIL PLUG Ø16 mm.

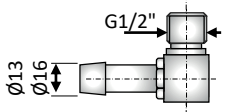

PC2249-G012-L020

RACCORDO DRITTO FIL. FEMMINA G1/2“ – G1/2“ FEMALE THREADED EXTENSION PLUG

PC2249-G012-L040

RACCORDO DRITTO FIL. FEMMINA G1/2“ – G1/2“ FEMALE THREADED EXTENSION PLUG

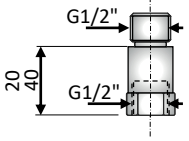

Promec FITTINGS

PM1312

PIASTRACON PASSAGGIO Ø12 – 10+10 POSIZIONI
PLATE WITH FLOW PASSAGE Ø12 10+10 GATES

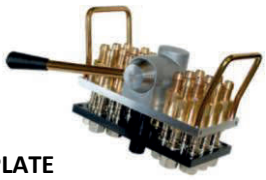

Ø12 – 10+10

PIASTRA LATO PRESSA – INJECTION MACHINE PLATE

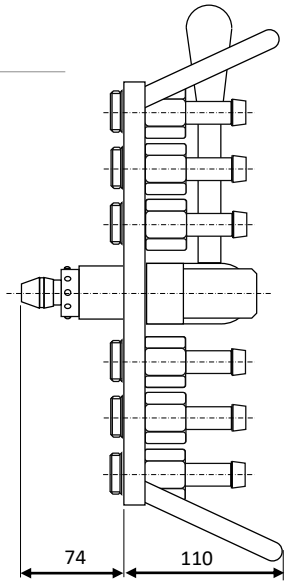

PM1312-20-16-MP
PIASTRA 20 INNESTI EASYLOCK CON VALVOLA TUBO Ø16 - PLATE WITH 20 EASYLOCK PLUG Ø16 WITH VALVE

PM1312-20-16-MT
PIASTRA 20 INNESTI CON PORTAGOMMA E VALVOLA PER TUBO Ø16 – PLATE WITH 20 HOSE TAIL PLUG Ø16 WITH VALVE

PM1312-20-G012-MF
PIASTRA 20 INNESTI CON FILETTO FEMMINA G1/2" CON VALVOLA - PLATE WITH 20 X G1/2" FEMALE TRHEADED PLUG WITH VALVE

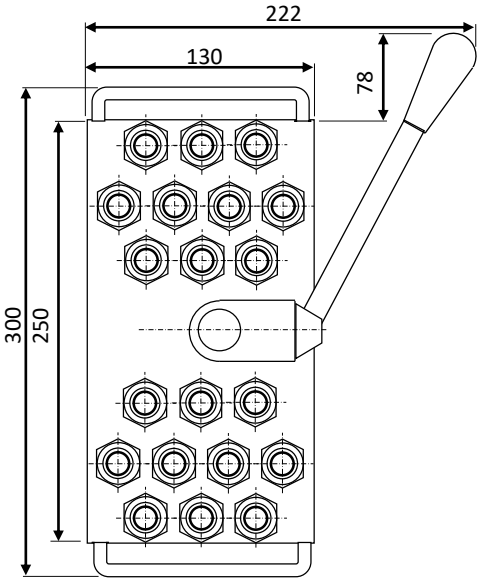

PM1312-20-00-MB
PIASTRA BASE, SENZA RACCORDI
BASE PLATE WITHOUT PLUGS

COMPONENTI SINGOLI – SINGLE COMPONENTS

PCM1301-12-16
RACCORDO EASYLOCK PER TUBO Ø16 mm. CON VALVOLA
EASYLOCK PLUG HOSE Ø16 mm. WITH VALVE

PCM1303-12-16
RACCORDO PORTAGOMMA TUBO Ø16 mm.
HOSE TAIL PLUG HOSE Ø16 mm. WITH VALVE

PCM1349-12-G012
RACCORDO DRITTO FIL. FEMMINA 1/2" BSPP
FEMALE THREADED PLUG 1/2" BSPP WITH VALVE

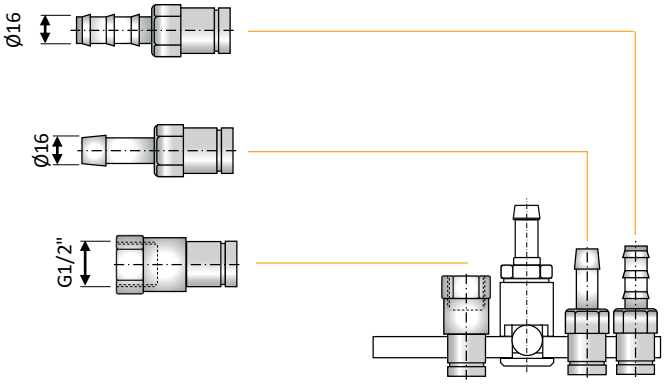

COMPONENTI PARTE STAMPO – MOULD SIDE COMPONENTS

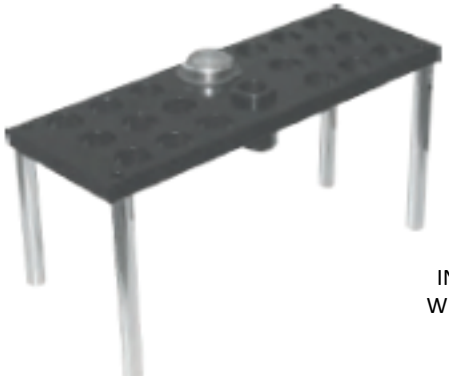

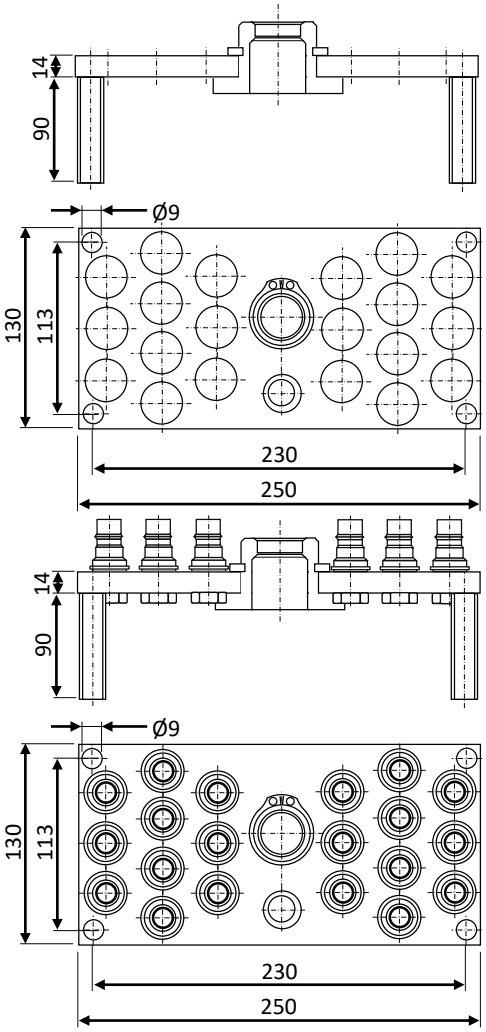

PM1312-20-00-SB

PIASTRA BASE CON PIEDINI E
INNESTO PIASTRA - BASE PLATE
WITH SPACERS AND PLATE PLUG

PM1312-20-20-SBXV

PIASTRA CON INNESTI RAPIDI SENZA VALVOLA
PLATE WITH QUICK COUPLINGS WITHOUT VALVE

PM1312-20-20-SBYV

PIASTRA CON INNESTI RAPIDI CON VALVOLA
PLATE WITH QUICK COUPLINGS WITH VALVE

COMPONENTI SINGOLI – SINGLE COMPONENTS

PCM1319-12-G012-BYV

INNESTO RAPIDO DI COLLEGAMENTO ALLA PARTE MOBILE CON VALVOLA
QUICK COUPLING WITH VALVE FOR CONNECTING TO THE MOBILE PLATE

PCM1319-12-G012-BXV

INNESTO RAPIDO DI COLLEGAMENTO ALLA PARTE MOBILE SENZA VALVOLA
QUICK COUPLING WITHOUT VALVE FOR CONNECTING TO THE MOBILE PLATE

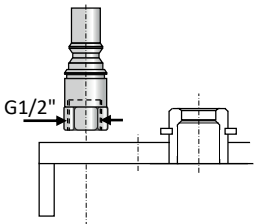

PC2247-13-G012

RACCORDO EASYLOCK 90° PER TUBO Ø12,7 mm. - 90° EASYLOCK PLUG HOSE Ø12,7 mm.

PC2247-16-G012

RACCORDO EASYLOCK 90° PER TUBO Ø16 mm. - 90° EASYLOCK PLUG HOSE Ø16 mm.

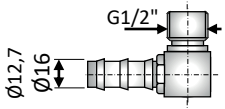

PC2248-13-G012

RACCORDO PORTAGOMMA 90° TUBO Ø13 mm. - 90° HOSE TAIL PLUG Ø13 mm.

PC2248-16-G012

RACCORDO PORTAGOMMA 90° TUBO Ø16 mm. - 90° HOSE TAIL PLUG Ø16 mm.

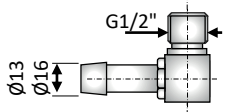

PC2249-G012-L020

RACCORDO DRITTO FIL. FEMMINA G1/2“ – G1/2“ FEMALE THREADED EXTENSION PLUG

PC2249-G012-L040

RACCORDO DRITTO FIL. FEMMINA G1/2“ – G1/2“ FEMALE THREADED EXTENSION PLUG

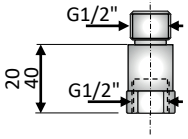

Promec FITTINGS

PM1316

PIASTRACON PASSAGGIO Ø16 – 6+6 POSIZIONI
PLATE WITH FLOW PASSAGE Ø16 6+6 GATES

PIASTRA LATO PRESSA – INJECTION MACHINE PLATE

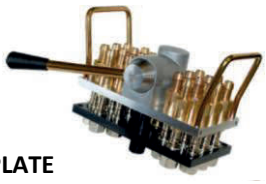

Ø16 – 6+6

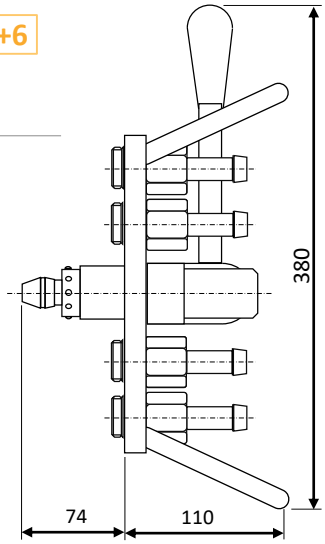

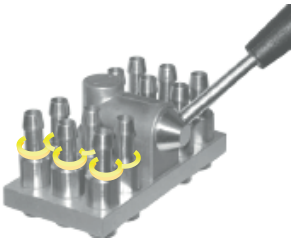

PM1316-12-19-MP
PIASTRA 12 INNESTI EASYLOCK CON VALVOLA TUBO Ø19 - PLATE WITH 12 EASYLOCK PLUG Ø19 WITH VALVE

PM1316-12-19-MT
PIASTRA 12 INNESTI CON PORTAGOMMA E VALVOLA PER TUBO Ø19 – PLATE WITH 12 HOSE TAIL PLUG Ø19 WITH VALVE

PM1316-12-G034-MF
PIASTRA 12 INNESTI CON FILETTO FEMMINA G3/4" CON VALVOLA - PLATE WITH 12 X G3/4" FEMALE TRHEADED PLUG WITH VALVE

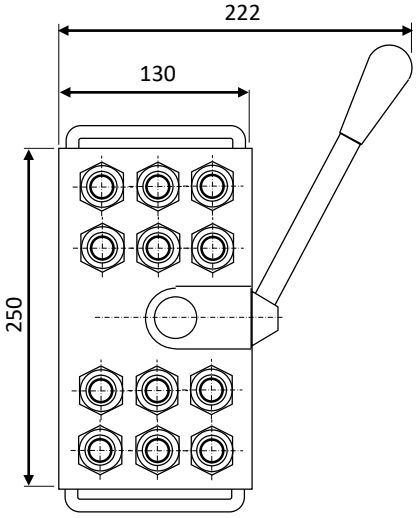

PM1316-12-00-MB
PIASTRA BASE, SENZA RACCORDI
BASE PLATE WITHOUT PLUGS

COMPONENTI SINGOLI – SINGLE COMPONENTS

PCM1301-16-19
RACCORDO EASYLOCK PER TUBO Ø19 mm. CON VALVOLA
EASYLOCK PLUG HOSE Ø19 mm. WITH VALVE

PCM1303-16-19
RACCORDO PORTAGOMMA TUBO Ø19 mm.
HOSE TAIL PLUG HOSE Ø19 mm. WITH VALVE

PCM1349-16-G034
RACCORDO DRITTO FIL. FEMMINA 3/4" BSPP
FEMALE THREADED PLUG 3/4" BSPP WITH VALVE

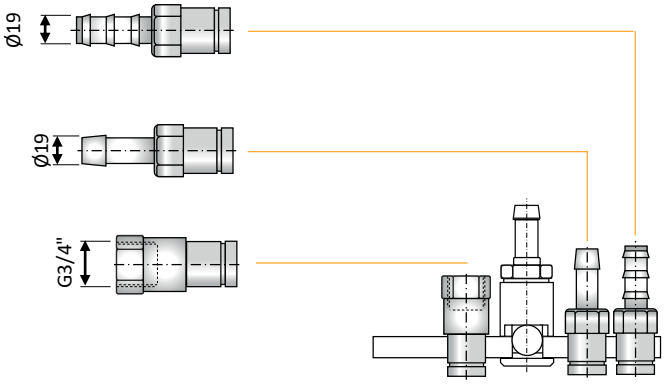

COMPONENTI PARTE STAMPO – MOULD SIDE COMPONENTS

PM1316-12-SC-BXV

PIASTRA CON 12 NIPPLI MASCHIO SENZA VALVOLA
PLATE WITH 12 PLUGS WITHOUT VALVE

PM1316-12-SC-BYV

PIASTRA CON 12 NIPPLI MASCHIO CON VALVOLA
PLATE WITH 12 PLUGS WITH VALVE

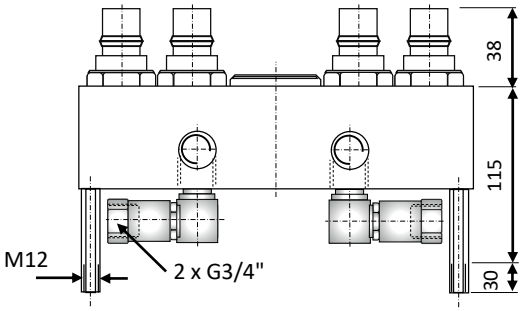

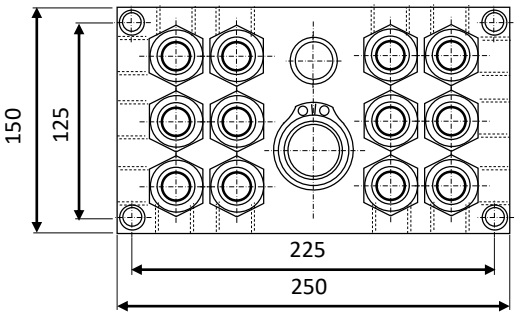

MULTICONNESSIONE SERIE 115 CON 4, 5 e 6 CIRCUITI
115 SERIES MULTICOUPLINGS WITH 4, 5 e 6 CIRCUITS

PM0115 **220**

MULTICONNESSIONE SERIE 115 CON 7 E 8 CIRCUITI
115 SERIES MULTICOUPLINGS WITH 7 AND 8 CIRCUITS

PM0115 **222**

CARATTERISTICHE TECNICHE:
Pressione max. di esercizio: 100 Bar
Temperatura max. di esercizio: 100°C
Portata max. 8 lit\min

TECHNICAL FEATURES:
Max. working pressure: 100 Bar
Max. wording temperature: 100°C
Max. flow 8 lit\min

Promec FITTINGS

PM0115

PIASTRA LATO PRESSA – INJECTION MACHINE PLATE

PIASTRACON PASSAGGIO Ø5 – 4+4 POSIZIONI
PLATE WITH FLOW PASSAGE Ø5 4+4 GATES

PM0115-05-08-G014-MF

PIASTRA 8 INNESTI CON VALVOLA FACCIA PIANA E FILETTO FEMMINA G1/4" - PLATE WITH 8 FLAT FACE VALVE PLUGS AND G1/4" FEMALE THREAD

PIASTRACON PASSAGGIO Ø5 – 5+5 POSIZIONI
PLATE WITH FLOW PASSAGE Ø5 5+5 GATES

PM0115-05-10-G014-MF

PIASTRA 10 INNESTI CON VALVOLA FACCIA PIANA E FILETTO FEMMINA G1/4" - PLATE WITH 10 FLAT FACE VALVE PLUGS AND G1/4" FEMALE THREAD

PIASTRACON PASSAGGIO Ø5 – 6+6 POSIZIONI
PLATE WITH FLOW PASSAGE Ø5 6+6 GATES

PM0115-05-10-G014-MF

PIASTRA 12 INNESTI CON VALVOLA FACCIA PIANA E FILETTO FEMMINA G1/4" - PLATE WITH 12 FLAT FACE VALVE PLUGS AND G1/4" FEMALE THREAD

Disponibili anche con filetto femmina conico R1/4", NPT 1/4" e UNF 9/16-18 – Available also with female thread R1/4" conical, NPT 1/4" and UNF 9/16-18

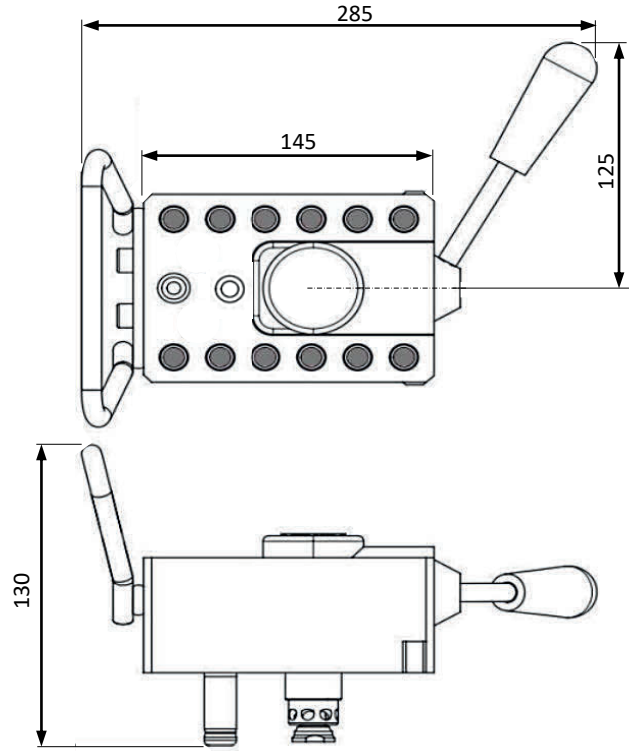

PCM0115-05-IF

INNESTO FEMMINA PER PIASTRA-STAMPO PM0115 PASSAGGIO Ø5
FEMALE PLUG FOR MOULD-PLATE PM0115 WITH FLOW PASSAGE Ø5

PM0115

PIASTRA LATO STAMPO – MOULD PLATE

PIASTRACON PASSAGGIO Ø5 – 4+4 POSIZIONI
PLATE WITH FLOW PASSAGE Ø5 4+4 GATES

PM0115-05-08-G014-SB

PIASTRA 8 INNESTI CON VALVOLA FACCIA PIANA E FILETTO FEMMINA G1/4" - PLATE WITH 8 FLAT FACE VALVE PLUGS AND G1/4" FEMALE THREAD

PIASTRACON PASSAGGIO Ø5 – 5+5 POSIZIONI
PLATE WITH FLOW PASSAGE Ø5 5+5 GATES

PM0115-05-10-G014-SB

PIASTRA 10 INNESTI CON VALVOLA FACCIA PIANA E FILETTO FEMMINA G1/4" - PLATE WITH 10 FLAT FACE VALVE PLUGS AND G1/4" FEMALE THREAD

PIASTRACON PASSAGGIO Ø5 – 6+6 POSIZIONI
PLATE WITH FLOW PASSAGE Ø5 6+6 GATES

PM0115-05-12-G014-SB

PIASTRA 12 INNESTI CON VALVOLA FACCIA PIANA E FILETTO FEMMINA G1/4" - PLATE WITH 12 FLAT FACE VALVE PLUGS AND G1/4" FEMALE THREAD

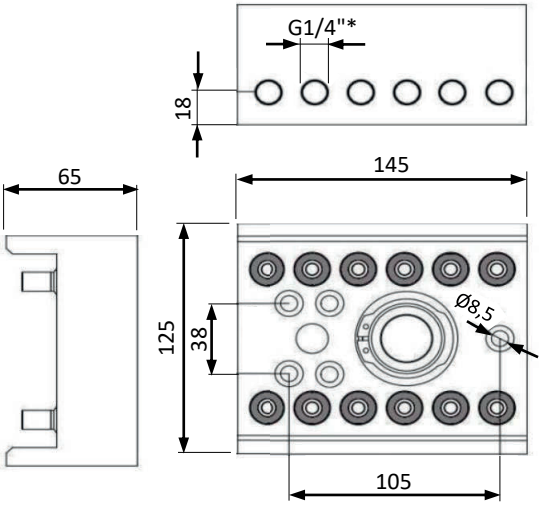

* Disponibili anche con filetto femmina conico R1/4", NPT 1/4" e UNF 9/16-18 – Available also with female thread R1/4" conical, NPT 1/4" and UNF 9/16-18

PCM0115-05-IM

INNESTO MASCHIO PER PIASTRA-STAMPO PM0115 PASSAGGIO Ø5
MALE PLUG FOR MOULD-PLATE PM0115 WITH FLOW PASSAGE Ø5

PM0115

PIASTRA LATO PRESSA – INJECTION MACHINE PLATE

PIASTRACON PASSAGGIO Ø5 – 8+8 POSIZIONI
PLATE WITH FLOW PASSAGE Ø5 8+8 GATES

PM0115-05-16-G014-MF

PIASTRA 16 INNESTI CON VALVOLA FACCIA PIANA E FILETTO FEMMINA G1/4" - PLATE WITH 16 FLAT FACE VALVE PLUGS AND G1/4" FEMALE THREAD

PIASTRACON PASSAGGIO Ø5 – 7+7 POSIZIONI
PLATE WITH FLOW PASSAGE Ø5 7+7 GATES

PM0115-05-14-G014-MF

PIASTRA 14 INNESTI CON VALVOLA FACCIA PIANA E FILETTO FEMMINA G1/4" - PLATE WITH 14 FLAT FACE VALVE PLUGS AND G1/4" FEMALE THREAD

Disponibili anche con filetto femmina conico R1/4", NPT 1/4" e UNF 9/16-18 – Available also with female thread R1/4" conical, NPT 1/4" and UNF 9/16-18

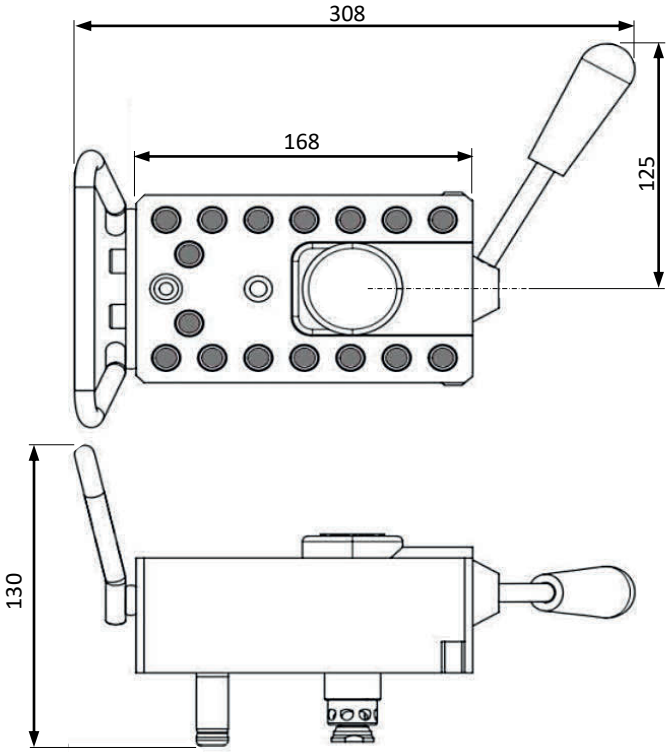

PCM0115-05-IF

INNESTO FEMMINA PER PIASTRA-STAMPO PM0115 PASSAGGIO Ø5
FEMALE PLUG FOR MOULD-PLATE PM0115 WITH FLOW PASSAGE Ø5

PM0115

PIASTRA LATO STAMPO – MOULD PLATE

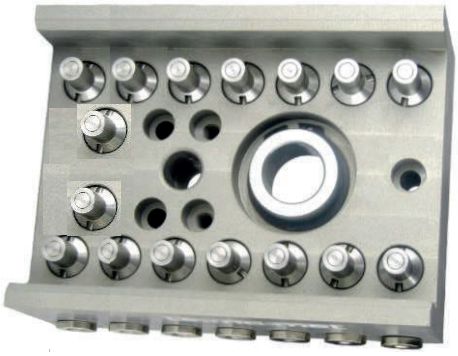

PIASTRACON PASSAGGIO Ø5 – 8+8 POSIZIONI
PLATE WITH FLOW PASSAGE Ø5 8+8 GATES

PM0115-05-16-G014-SB

PIASTRA 16 INNESTI CON VALVOLA FACCIA PIANA E FILETTO FEMMINA G1/4" - PLATE WITH 16 FLAT FACE VALVE PLUGS AND G1/4" FEMALE THREAD

PIASTRACON PASSAGGIO Ø5 – 7+7 POSIZIONI
PLATE WITH FLOW PASSAGE Ø5 7+7 GATES

PM0115-05-14-G014-SB

PIASTRA 14 INNESTI CON VALVOLA FACCIA PIANA E FILETTO FEMMINA G1/4" - PLATE WITH 14 FLAT FACE VALVE PLUGS AND G1/4" FEMALE THREAD

Disponibili anche con filetto femmina conico R1/4", NPT 1/4" e UNF 9/16-18 – Available also with female thread R1/4" conical, NPT 1/4" and UNF 9/16-18

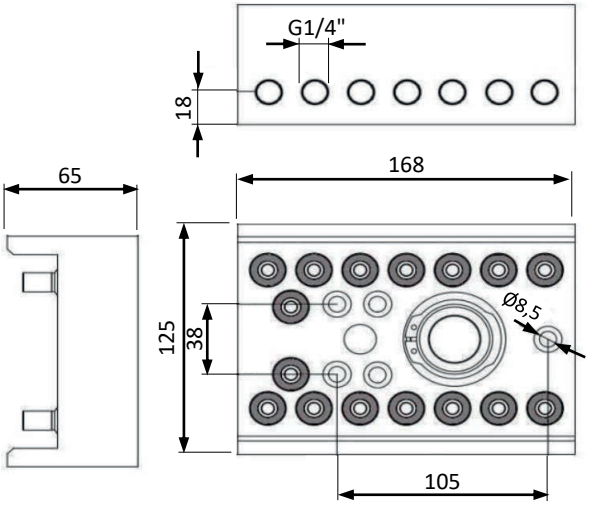

PCM0115-05-IM

INNESTO MASCHIO PER PIASTRA-STAMPO PM0115 PASSAGGIO Ø5
MALE PLUG FOR MOULD-PLATE PM0115 WITH FLOW PASSAGE Ø5

MULTICONNESSIONE ALTA PRESSIONE PER CIRCUITI OLEDINAMICI A 2 INNESTI – HIGH PRESSURE HYDRAULIC MULTICOUPLINGS FOR 2 PLUGS

PM0108.08 **226**

MULTICONNESSIONE ALTA PRESSIONE PER CIRCUITI OLEDINAMICI A 4 INNESTI – HIGH PRESSURE HYDRAULIC MULTICOUPLINGS FOR 4 PLUGS

PM0108.08 **227**

MULTICONNESSIONE ALTA PRESSIONE PER CIRCUITI OLEDINAMICI A 6 INNESTI – HIGH PRESSURE HYDRAULIC MULTICOUPLINGS FOR 6 PLUGS

PM0108.08 **228**

MULTICONNESSIONE ALTA PRESSIONE PER CIRCUITI OLEDINAMICI A 2 INNESTI – HIGH PRESSURE HYDRAULIC MULTICOUPLINGS FOR 2 PLUGS

PM0108.10 **229**

MULTICONNESSIONE ALTA PRESSIONE PER CIRCUITI OLEDINAMICI A 4 INNESTI – HIGH PRESSURE HYDRAULIC MULTICOUPLINGS FOR 4 PLUGS

PM0108.10 **230**

MULTICONNESSIONE ALTA PRESSIONE PER CIRCUITI OLEDINAMICI A 6 INNESTI – HIGH PRESSURE HYDRAULIC MULTICOUPLINGS FOR 6 PLUGS

PM0108.10 **231**

CARATTERISTICHE TECNICHE:
Pressione max. di esercizio: 180 Bar
Temperatura max. di esercizio: 100°C
Portata max. fino a 30 lit\min

TECHNICAL FEATURES:
Max. working pressure: 180 Bar
Max. wording temperature: 100°C
Max. flow up to 30 lit\min

PM0108.08

PIASTRACON PASSAGGIO Ø8 – 1+1 POSIZIONI
PLATE WITH FLOW PASSAGE Ø8 1+1 GATES

PIASTRA LATO PRESSA – INJECTION MACHINE PLATE

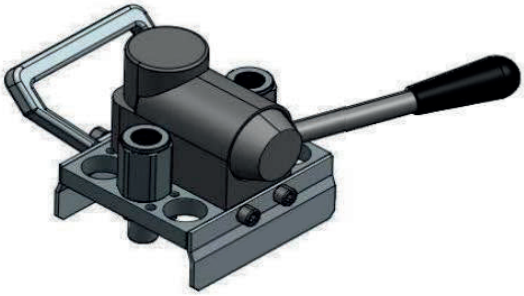

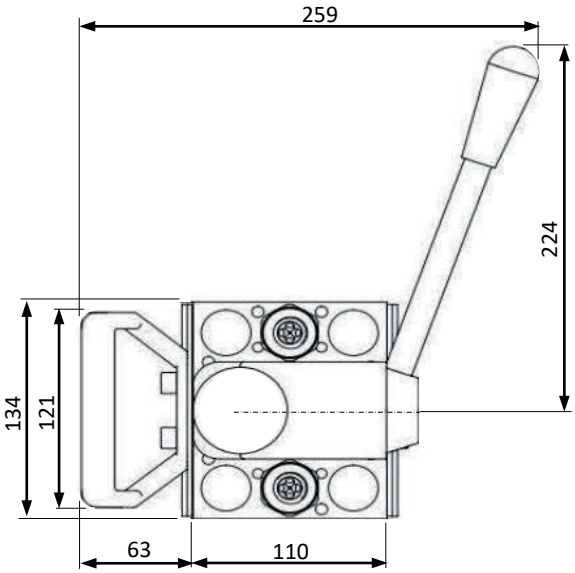

PM0108-08-02-G038-MF

PIASTRA 2 INNESTI CON VALVOLA FACCIA PIANA E FILETTO FEMMINA G3/8" - PLATE WITH 2 FLAT FACE VALVE PLUGS AND G3/8" FEMALE THREAD

PM0108-08-02-G012-MF

PIASTRA 2 INNESTI CON VALVOLA FACCIA PIANA E FILETTO FEMMINA G1/2" - PLATE WITH 2 FLAT FACE VALVE PLUGS AND G1/2" FEMALE THREAD

Disponibili anche con filetto femmina NPT e UNF – Available also with female thread NPT and UNF

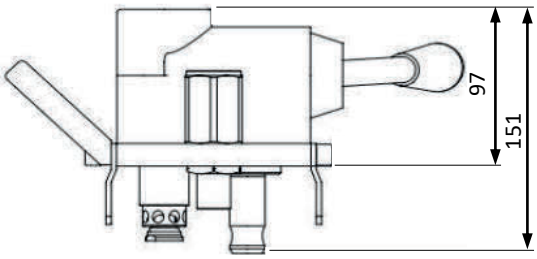

PIASTRA LATO STAMPO – MOULD PLATE

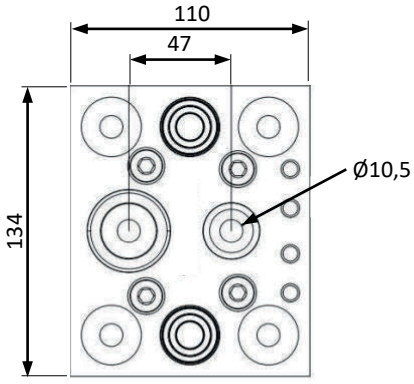

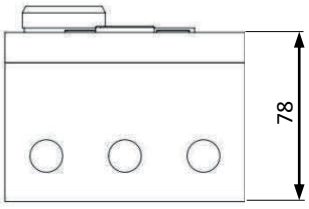

PM0108-08-02-G038-SB

PIASTRA 2 INNESTI CON VALVOLA FACCIA PIANA E FILETTO FEMMINA G3/8" - PLATE WITH 2 FLAT FACE VALVE PLUGS AND G3/8" FEMALE THREAD

PM0108-08-02-G012-SB

PIASTRA 2 INNESTI CON VALVOLA FACCIA PIANA E FILETTO FEMMINA G1/2" - PLATE WITH 2 FLAT FACE VALVE PLUGS AND G1/2" FEMALE THREAD

Disponibili anche con filetto femmina NPT e UNF – Available also with female thread NPT and UNF

PM0108.08

PIASTRACON PASSAGGIO Ø8 – 2+2 POSIZIONI
PLATE WITH FLOW PASSAGE Ø8 2+2 GATES

PIASTRA LATO PRESSA – INJECTION MACHINE PLATE

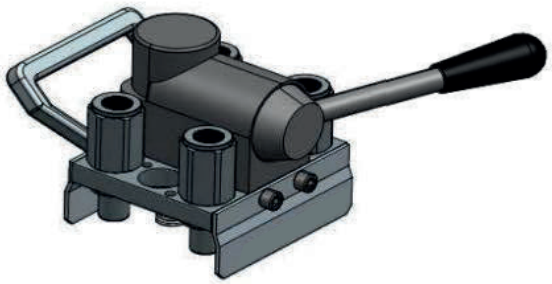

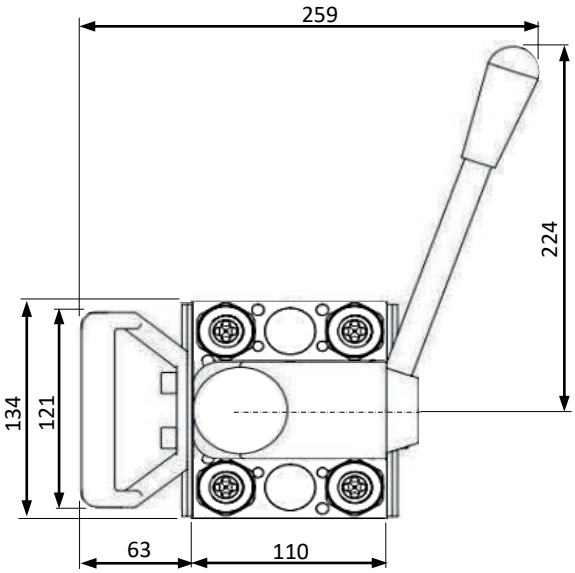

PM0108-08-04-G038-MF

PIASTRA 2 INNESTI CON VALVOLA FACCIA PIANA E FILETTO FEMMINA G3/8" - PLATE WITH 2 FLAT FACE VALVE PLUGS AND G3/8" FEMALE THREAD

PM0108-08-04-G012-MF

PIASTRA 2 INNESTI CON VALVOLA FACCIA PIANA E FILETTO FEMMINA G1/2" - PLATE WITH 2 FLAT FACE VALVE PLUGS AND G1/2" FEMALE THREAD

Disponibili anche con filetto femmina NPT e UNF – Available also with female thread NPT and UNF

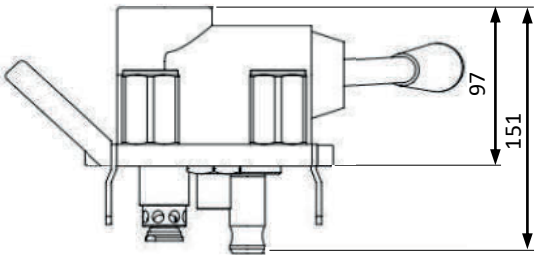

PIASTRA LATO STAMPO – MOULD PLATE

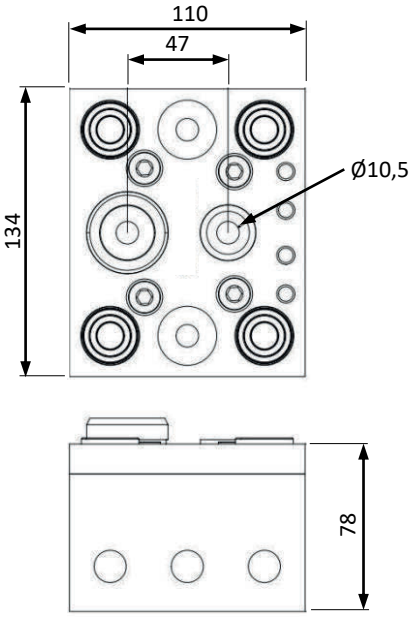

PM0108-08-04-G038-SB

PIASTRA 2 INNESTI CON VALVOLA FACCIA PIANA E FILETTO FEMMINA G3/8" - PLATE WITH 2 FLAT FACE VALVE PLUGS AND G3/8" FEMALE THREAD

PM0108-08-04-G012-SB

PIASTRA 2 INNESTI CON VALVOLA FACCIA PIANA E FILETTO FEMMINA G1/2" - PLATE WITH 2 FLAT FACE VALVE PLUGS AND G1/2" FEMALE THREAD

Disponibili anche con filetto femmina NPT e UNF – Available also with female thread NPT and UNF

PM0108.08

PIASTRACON PASSAGGIO Ø8 – 3+3 POSIZIONI
PLATE WITH FLOW PASSAGE Ø8 3+3 GATES

PIASTRA LATO PRESSA – INJECTION MACHINE PLATE

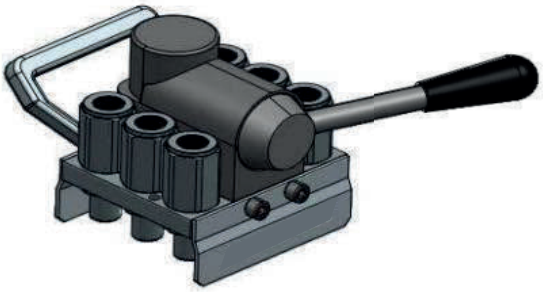

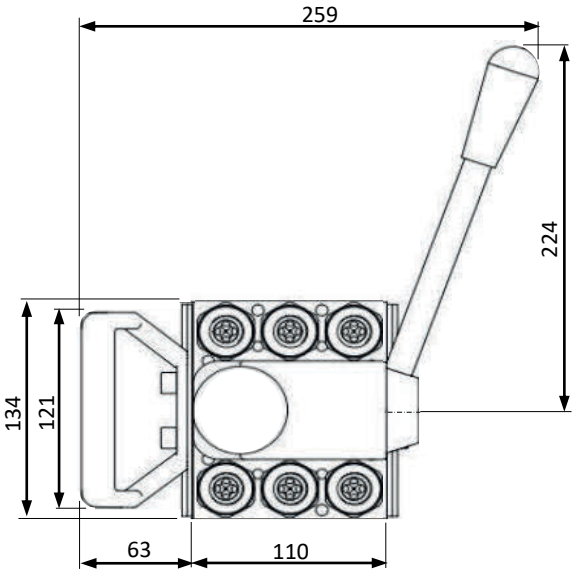

PM0108-08-02-G038-MF

PIASTRA 2 INNESTI CON VALVOLA FACCIA PIANA E FILETTO FEMMINA G3/8" - PLATE WITH 2 FLAT FACE VALVE PLUGS AND G3/8" FEMALE THREAD

PM0108-08-02-G012-MF

PIASTRA 2 INNESTI CON VALVOLA FACCIA PIANA E FILETTO FEMMINA G1/2" - PLATE WITH 2 FLAT FACE VALVE PLUGS AND G1/2" FEMALE THREAD

Disponibili anche con filetto femmina NPT e UNF – Available also with female thread NPT and UNF

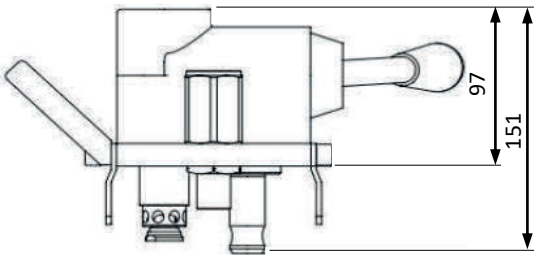

PIASTRA LATO STAMPO – MOULD PLATE

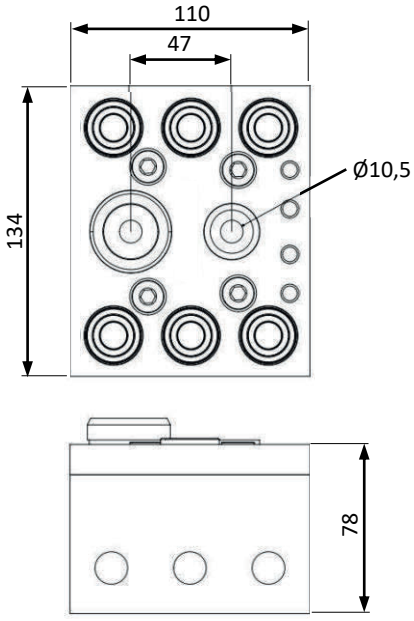

PM0108-08-06-G038-SB

PIASTRA 2 INNESTI CON VALVOLA FACCIA PIANA E FILETTO FEMMINA G3/8" - PLATE WITH 2 FLAT FACE VALVE PLUGS AND G3/8" FEMALE THREAD

PM0108-08-06-G012-SB

PIASTRA 2 INNESTI CON VALVOLA FACCIA PIANA E FILETTO FEMMINA G1/2" - PLATE WITH 2 FLAT FACE VALVE PLUGS AND G1/2" FEMALE THREAD

Disponibili anche con filetto femmina NPT e UNF – Available also with female thread NPT and UNF

PM0108.10

PIASTRACON PASSAGGIO Ø10 – 1+1 POSIZIONI
PLATE WITH FLOW PASSAGE Ø10 1+1 GATES

PIASTRA LATO PRESSA – INJECTION MACHINE PLATE

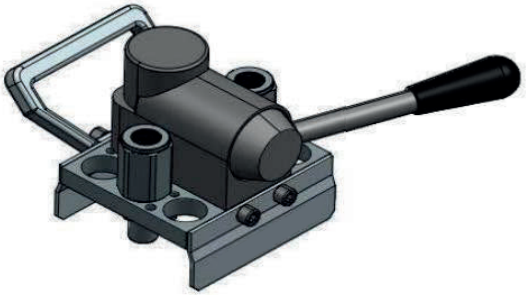

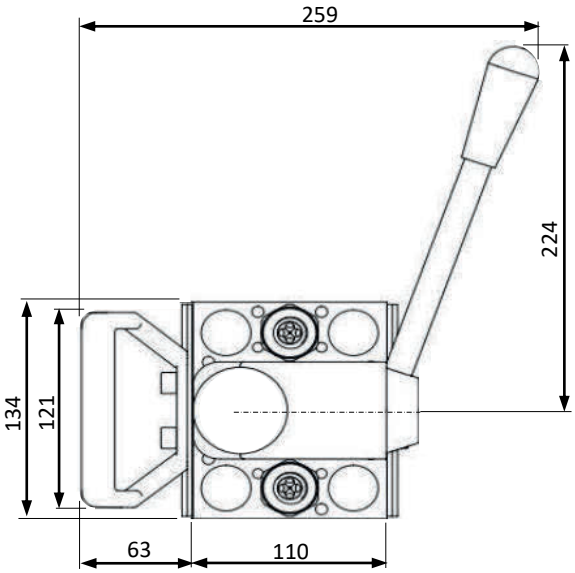

PM0108-10-02-G038-MF

PIASTRA 2 INNESTI CON VALVOLA FACCIA PIANA E FILETTO FEMMINA G3/8" - PLATE WITH 2 FLAT FACE VALVE PLUGS AND G3/8" FEMALE THREAD

PM0108-10-02-G012-MF

PIASTRA 2 INNESTI CON VALVOLA FACCIA PIANA E FILETTO FEMMINA G1/2" - PLATE WITH 2 FLAT FACE VALVE PLUGS AND G1/2" FEMALE THREAD

Disponibili anche con filetto femmina NPT e UNF – Available also with female thread NPT and UNF

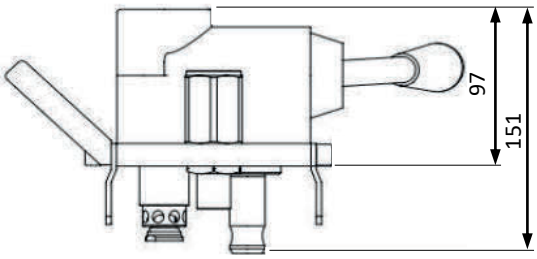

PIASTRA LATO STAMPO – MOULD PLATE

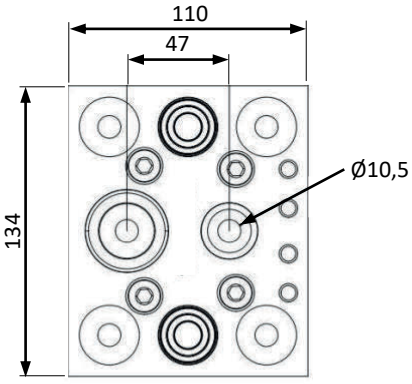

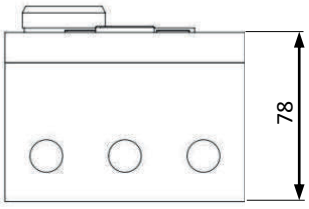

PM0108-10-02-G038-SB

PIASTRA 2 INNESTI CON VALVOLA FACCIA PIANA E FILETTO FEMMINA G3/8" - PLATE WITH 2 FLAT FACE VALVE PLUGS AND G3/8" FEMALE THREAD

PM0108-10-02-G012-SB

PIASTRA 2 INNESTI CON VALVOLA FACCIA PIANA E FILETTO FEMMINA G1/2" - PLATE WITH 2 FLAT FACE VALVE PLUGS AND G1/2" FEMALE THREAD

Disponibili anche con filetto femmina NPT e UNF – Available also with female thread NPT and UNF

PM0108.10

PIASTRACON PASSAGGIO Ø10 – 2+2 POSIZIONI
PLATE WITH FLOW PASSAGE Ø10 2+2 GATES

PIASTRA LATO PRESSA – INJECTION MACHINE PLATE

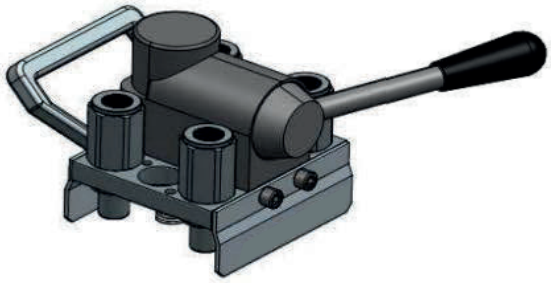

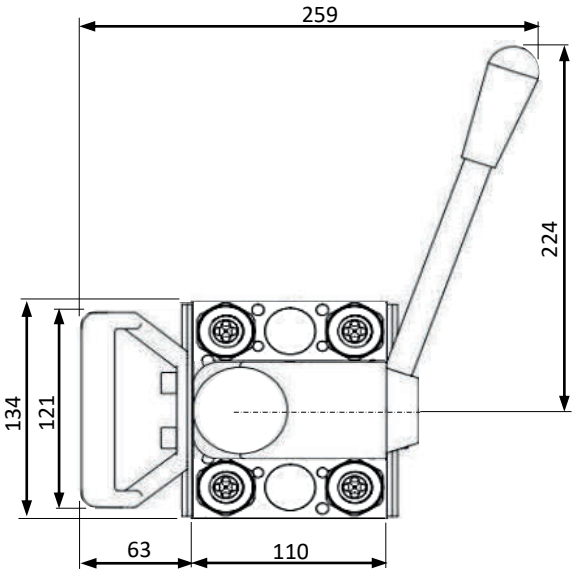

PM0108-10-04-G038-MF

PIASTRA 2 INNESTI CON VALVOLA FACCIA PIANA E FILETTO FEMMINA G3/8" - PLATE WITH 2 FLAT FACE VALVE PLUGS AND G3/8" FEMALE THREAD

PM0108-10-04-G012-MF

PIASTRA 2 INNESTI CON VALVOLA FACCIA PIANA E FILETTO FEMMINA G1/2" - PLATE WITH 2 FLAT FACE VALVE PLUGS AND G1/2" FEMALE THREAD

Disponibili anche con filetto femmina NPT e UNF – Available also with female thread NPT and UNF

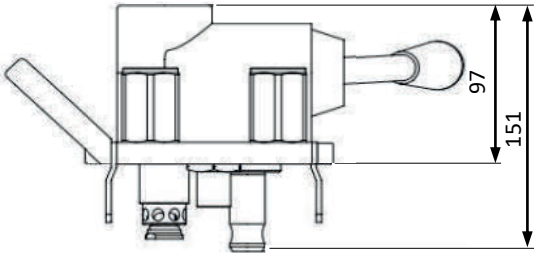

PIASTRA LATO STAMPO – MOULD PLATE

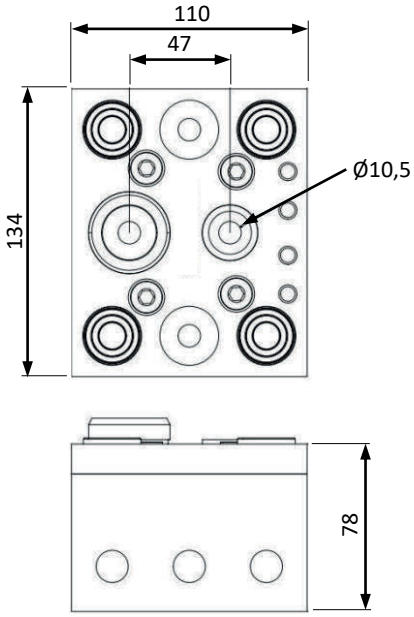

PM0108-10-04-G038-SB

PIASTRA 2 INNESTI CON VALVOLA FACCIA PIANA E FILETTO FEMMINA G3/8" - PLATE WITH 2 FLAT FACE VALVE PLUGS AND G3/8" FEMALE THREAD

PM0108-10-04-G012-SB

PIASTRA 2 INNESTI CON VALVOLA FACCIA PIANA E FILETTO FEMMINA G1/2" - PLATE WITH 2 FLAT FACE VALVE PLUGS AND G1/2" FEMALE THREAD

Disponibili anche con filetto femmina NPT e UNF – Available also with female thread NPT and UNF

PM0108.10

PIASTRACON PASSAGGIO Ø10 – 3+3 POSIZIONI
PLATE WITH FLOW PASSAGE Ø10 3+3 GATES

PIASTRA LATO PRESSA – INJECTION MACHINE PLATE

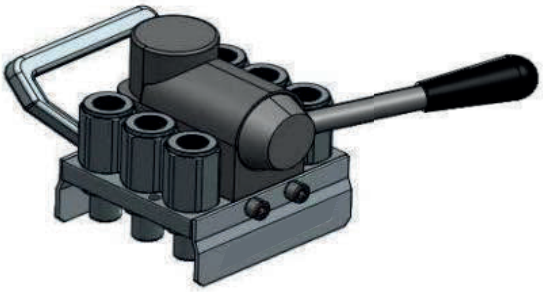

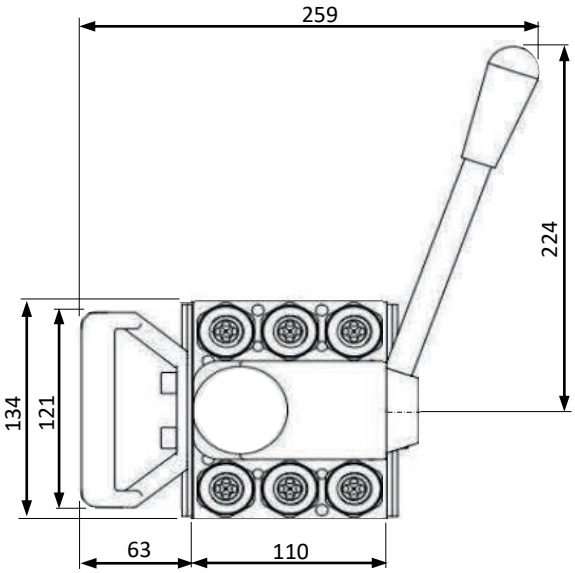

PM0108-10-02-G038-MF

PIASTRA 2 INNESTI CON VALVOLA FACCIA PIANA E FILETTO FEMMINA G3/8" - PLATE WITH 2 FLAT FACE VALVE PLUGS AND G3/8" FEMALE THREAD

PM0108-10-02-G012-MF

PIASTRA 2 INNESTI CON VALVOLA FACCIA PIANA E FILETTO FEMMINA G1/2" - PLATE WITH 2 FLAT FACE VALVE PLUGS AND G1/2" FEMALE THREAD

Disponibili anche con filetto femmina NPT e UNF – Available also with female thread NPT and UNF

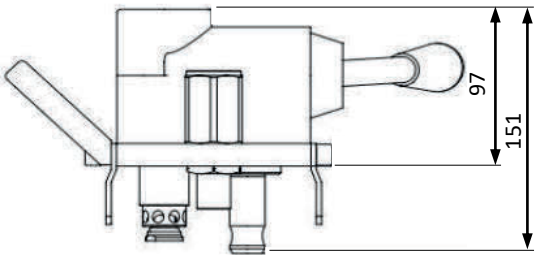

PIASTRA LATO STAMPO – MOULD PLATE

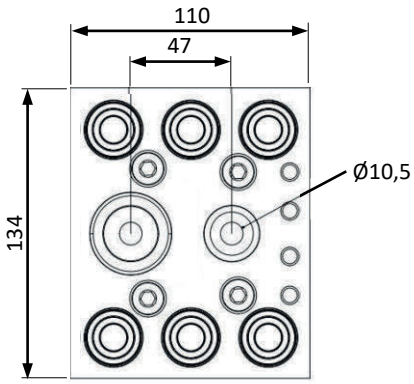

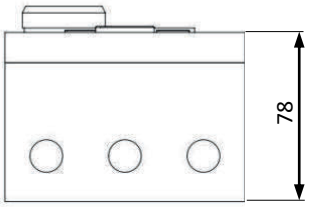

PM0108-10-06-G038-SB

PIASTRA 2 INNESTI CON VALVOLA FACCIA PIANA E FILETTO FEMMINA G3/8" - PLATE WITH 2 FLAT FACE VALVE PLUGS AND G3/8" FEMALE THREAD

PM0108-10-06-G012-SB

PIASTRA 2 INNESTI CON VALVOLA FACCIA PIANA E FILETTO FEMMINA G1/2" - PLATE WITH 2 FLAT FACE VALVE PLUGS AND G1/2" FEMALE THREAD

Disponibili anche con filetto femmina NPT e UNF – Available also with female thread NPT and UNF

VISUALIZZATORI DI FLUSSO
FLOWMETERS

PC5201
PC5202
PC5203
234

VISUALIZZATORI E REGOLATORI DI FLUSSO SERIE ECO 90°C
FLOW VIEWERS AND REGULATORS ECO SERIES 90°C

PC5204
PC5205
235

REGOLATORI DI FLUSSO ALTA PRESSIONE
HIGH PRESSURE FLOW REGULATORS

PH1301
236

REGOLATORI DI FLUSSO PER ACQUA 90°C MAX
WATER 90°C MAX FLOW REGULATORS

PR101
237

REGOLATORI DI FLUSSO PER ACQUA 90°C MAX
WATER 90°C MAX FLOW REGULATORS

PR102
238

REGOLATORI DI FLUSSO PER ACQUA E OLIO 120°C MAX
WATER AND OIL 120°C MAX FLOW REGULATORS

PR201
239

REGOLATORI DI FLUSSO PER ACQUA E OLIO 160°C MAX
WATER AND OIL 160°C MAX FLOW REGULATORS

PR301
240

REGOLATORI DI FLUSSO PER ACQUA 70°C MAX – SERIE ECO
WATER 70°C MAX FLOW REGULATORS – ECO SERIES

PR401
241

REGOLATORI DI FLUSSO PER ACQUA 70°C MAX – SERIE ECO
WATER 70°C MAX FLOW REGULATORS – ECO SERIES

PM380
242

SISTEMI DI CONTROLLO MELTMONITOR®
MELTMONITOR® ANALYSE SYSTEMS

PF
243

Promec FITTINGS

PC5203 VISUALIZZATORI DI FLUSSO – FLOW VIEWER

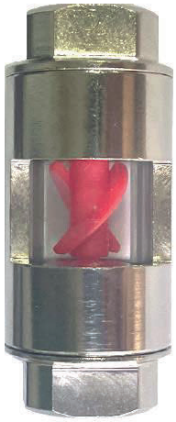

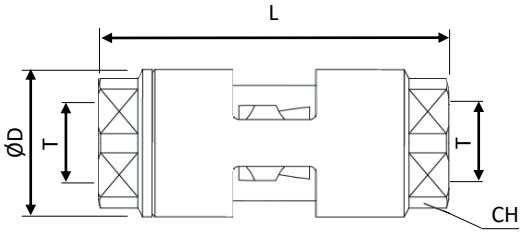

Codice-Code	CH	D	L	L1	ØT	Portata max. max. flow	Portata min. min. flow	Max. Bar	Max. temp.	Colore Colour
PC5203-G014	19	25	56	-	G1/4"	10 l/min	1 l/min	25	100°C	-
PC5203-G038	19	25	56	-	G3/8"	20 l/min	2 l/min	25		-

PC5201 VISUALIZZATORI DI FLUSSO – FLOW VIEWER

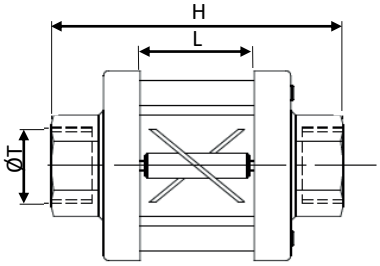

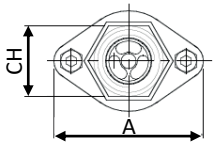

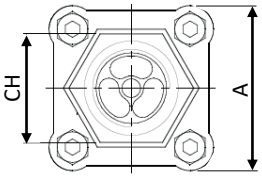

Codice-Code	A	CH	L	L1	ØT	Portata max. max. flow	Portata min. min. flow	Max. Bar	Max. temp.	Colore Colour
PC5201-G014-R	44	20	66	22	G1/4"	10 l/min	0,6 l/min	25	100°C	
PC5201-G014-B	44	20	66	22	G1/4"	10 l/min	0,6 l/min	25		
PC5201-G038-R	60	28	92	36	G3/8"	20 l/min	1,2 l/min	15		
PC5201-G038-B	60	28	92	36	G3/8"	20 l/min	1,2 l/min	15		
PC5201-G012-R	60	28	92	36	G1/2"	40 l/min	1,2 l/min	15		
PC5201-G012-B	60	28	92	36	G1/2"	40 l/min	1,2 l/min	15		
PC5201-G034-R	70	46	114	46	G3/4"	60 l/min	2,1 l/min	12		
PC5201-G034-B	70	46	114	46	G3/4"	60 l/min	2,1 l/min	12		
PC5201-G100-R	70	46	114	46	G1"	80 l/min	2,1 l/min	12		
PC5201-G100-B	70	46	114	46	G1"	80 l/min	2,1 l/min	12		

PC5202 REGOLATORI DI FLUSSO PER COLLETTORI – FLOW METER FOR MANIFOLD

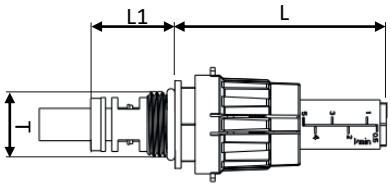

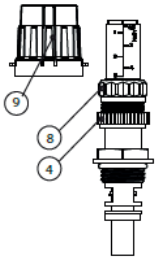

ISTRUZIONI PER L'USO:
1) Togliere il cappuccio (9)
2) Ruotare la ghiera (8) per impostare la portata desiderata.
3) Avvitare l'anello (4) in senso orario fino a fine corsa per fissare la portata selezionata.
4) Rimontare il cappuccio (9)
Nota: montaggio sulla mandata

USE INSTRUCTIONS:
1) Remove the cap (9)
2) Screw the ring (8) to set the desired flow rate.
3) Screw the memory ring (4) clockwise until it stops.
4) Install the cap (9)
Note: installattion o supply circuit

Codice-Code	A	CH	L	L1	ØT	Portata max. max. flow	Portata min. min. flow	Max. Bar	Max. temp.	Colore Colour
PC5202-05-G012	-	-	69	27	G1/2"	5 l/min	0,5 l/min	6	70°C	
PC5202-08-G012	-	-	75	27	G1/2"	8 l/min	0,5 l/min	6	70°C	

PC5204 VISUALIZZATORI DI FLUSSO SERIOE ECO 120°C – ECO SERIES 120°C FLOW VIEWER

Codice-Code

PC5204-G038

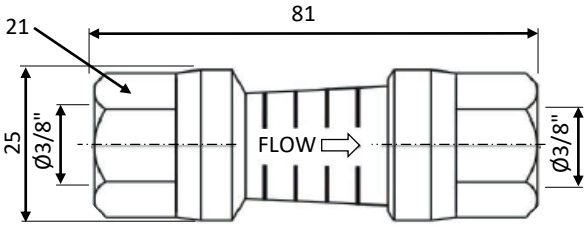

CARATTERISTICHE TECNICHE:
- Temperatura max. di esercizio: 120°C
- Pressione max. di esercizio: 5 Bar
- Portata max.: 18 lit\min.
- Serraggio max. di raccordatura: 12 Nm
- Materiale tubo trasparente: Poliammide
- Materiale corpo: ottone

TECHNICAL FEATURES:
- Max. working temperature 120°C
- Max. working pressure 5 Bar
- Max. Flow: 18 lit\min.
- Max. Installation torque 12 Nm
- Perspective tube material: Polyamide
- Body material: brass

PC5205 REGOLATORI DI FLUSSO SERIOE ECO – ECO SERIES FLOW METER

Codice-Code

PC5205-G038

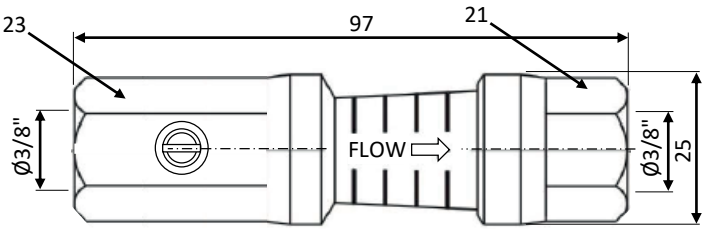

CARATTERISTICHE TECNICHE:
- Temperatura max. di esercizio: 120°C
- Pressione max. di esercizio: 5 Bar
- Portata max.: 18 lit\min.
- Serraggio max. di raccordatura: 12 Nm
- Materiale tubo trasparente: Poliammide
- Materiale corpo: ottone

TECHNICAL FEATURES:
- Max. working temperature 120°C
- Max. working pressure 5 Bar
- Max. Flow: 18 lit\min.
- Max. Installation torque 12 Nm
- Perspective tube material: Polyamide
- Body material: brass

Promec FITTINGS

PH1301

REGOLATORE DI FLUSSO UNIDIREZIONALE ALTA PRESSIONE FIL. FEM. BSPP 90°C
HIGH PRESSURE CUNIDIRECTIONAL FLOW REGULATOR BSPP FEMALE THREAD 90°C

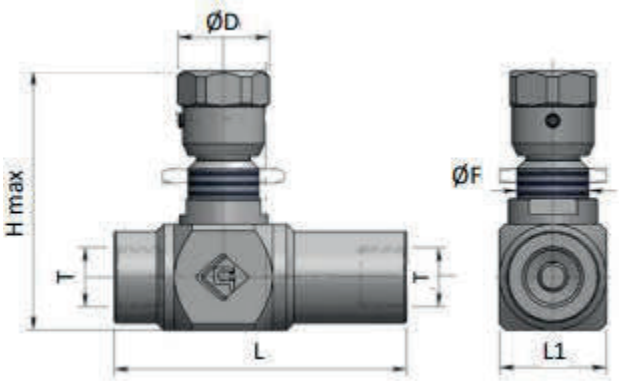

Codice-Code	ØD	F	H max	L	L1	T	max l/min	max Bar
PH1301-G014	26	M20x1.5	26	73	25	G1/4"	15	400
PH1301-G038	26	M20x1.5	32	83	30	G3/8"	30	400
PH1301-G012	29	M20x1.5	38	94	30	G1/2"	50	400
PH1301-G034	40	M35x1.5	46	110	40	G3/4"	80	400
PH1301-G100	40	M35x1.5	55	135	40	G1"	150	400

PR101

REGOLATORE DI FLUSSO PER ACQUA FINO A 90°C CON PORTAGOMMA
FLOW REGULATOR FOR WATER UP TO 90°C WITH HOSE TAIL

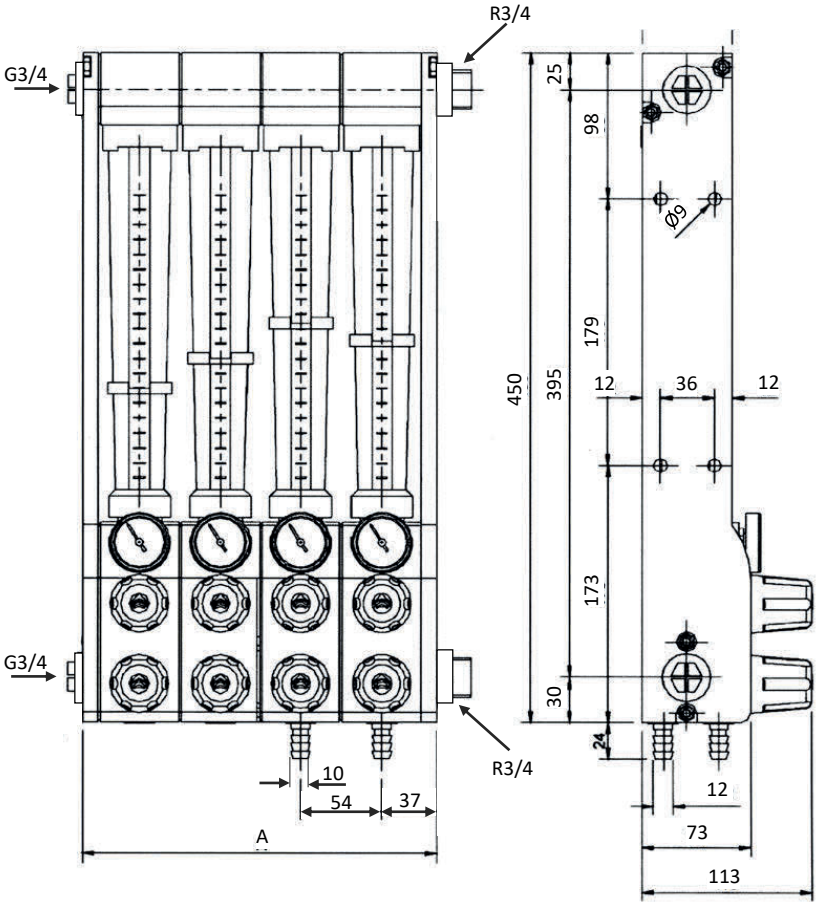

CARATTERISTICHE TECNICHE:
- Tubo metrico standard in PA 12
- Corpo in PA 6 + 30% fibra vetro
- Valvole di regolazione in ottone
- Termometro
- O-Rings a contatto con l'acqua in EPDM
- Valvole di entrata e uscita in ottone

TECHNICAL FEATURES:
- Metrico-tube made of PA 12
- Bodies made of PA 6 + 30% fiberglass
- Regulating Taps in brass
- Thermometer
- O'rings in contact with water in EPDM
- Brass inlet and outlet valves are inserted in the body

Codice-Code	N. USCITE N. GATES	A	MAX TEMP °C 7 Bar	5 Bar	4 Bar
PR101-02-G034-012	2	126	60	80	90
PR101-03-G034-012	3	179	60	80	90
PR101-04-G034-012	4	231	60	80	90
PR101-05-G034-012	5	284	60	80	90
PR101-06-G034-012	6	339	60	80	90
PR101-07-G034-012	7	392	60	80	90
PR101-08-G034-012	8	444	60	80	90
PR101-09-G034-012	9	497	60	80	90
PR101-10-G034-012	10	552	60	80	90
PR101-11-G034-012	11	607	60	80	90
PR101-12-G034-012	12	359	60	80	90

Promec FITTINGS

PR102

REGOLATORE DI FLUSSO PER ACQUA FINO A 90°C CON FILETTO FEMMINA BSPP
FLOW REGULATOR FOR WATER UP TO 90°C WITH BSPP FEMALE THREAD

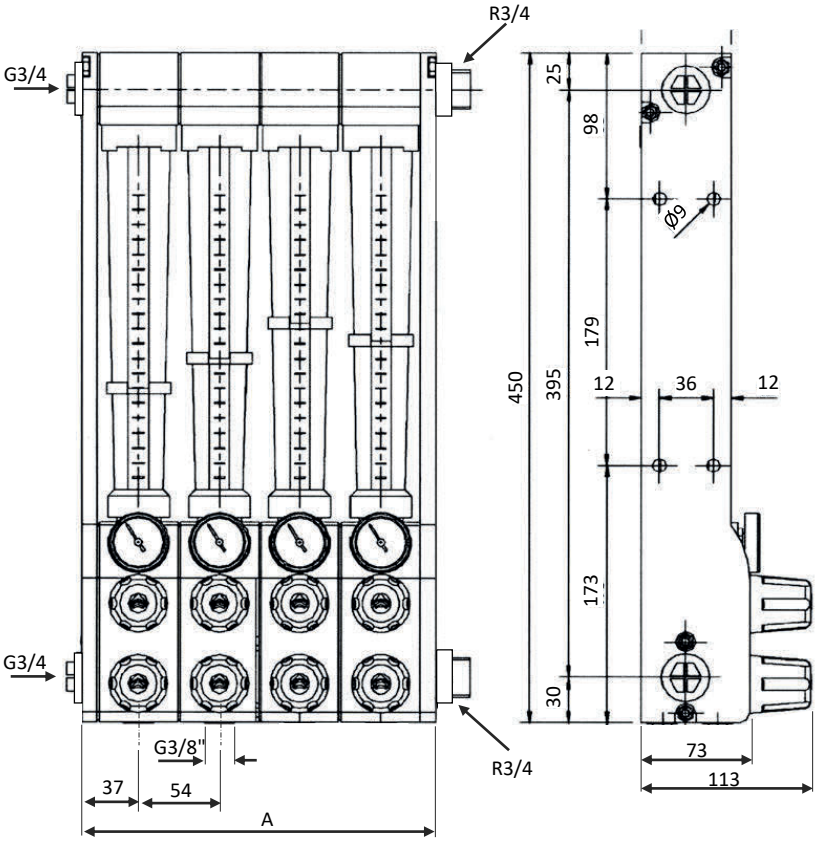

CARATTERISTICHE TECNICHE:
- Tubo metrico standard in PA 12
- Corpo in PA 6 + 30% fibra vetro
- Valvole di regolazione in ottone
- Termometro
- O-Rings a contatto con l'acqua in EPDM
- Valvole di entrata e uscita in ottone

TECHNICAL FEATURES:
- Metrico-tube made of PA 12
- Bodies made of PA 6 + 30% fiberglass
- Regulating Taps in brass
- Thermometer
- O'rings in contact with water in EPDM
- Brass inlet and outlet valves are inserted in the body

Codice-Code	N. USCITE N. GATES	A	MAX TEMP °C 7 Bar	5 Bar	4 Bar
PR102-02-G034-G038	2	126	60	80	90
PR102-03-G034-G038	3	179	60	80	90
PR102-04-G034-G038	4	231	60	80	90
PR102-05-G034-G038	5	284	60	80	90
PR102-06-G034-G038	6	339	60	80	90
PR102-07-G034-G038	7	392	60	80	90
PR102-08-G034-G038	8	444	60	80	90
PR102-09-G034-G038	9	497	60	80	90
PR102-10-G034-G038	10	552	60	80	90
PR102-11-G034-G038	11	607	60	80	90
PR102-12-G034-G038	12	359	60	80	90

PR201

REGOLATORE DI FLUSSO PER ACQUA FINO A 120°C
FLOW REGULATOR FOR WATER UP TO 120°C

CARATTERISTICHE TECNICHE:
- Tubo standard in vetro temperato
- Struttura in acciaio inox
- Valvole di regolazione in ottone
- Termometro
- O-Rings a contatto con l'acqua in EPDM
- Valvole di entrata e uscita in ottone

TECHNICAL FEATURES:
- Tube made of tempered glass
- Inox steel structure
- Regulating Taps in brass
- Thermometer
- O'rings in contact with water in EPDM
- Brass inlet and outlet valves are inserted in the body

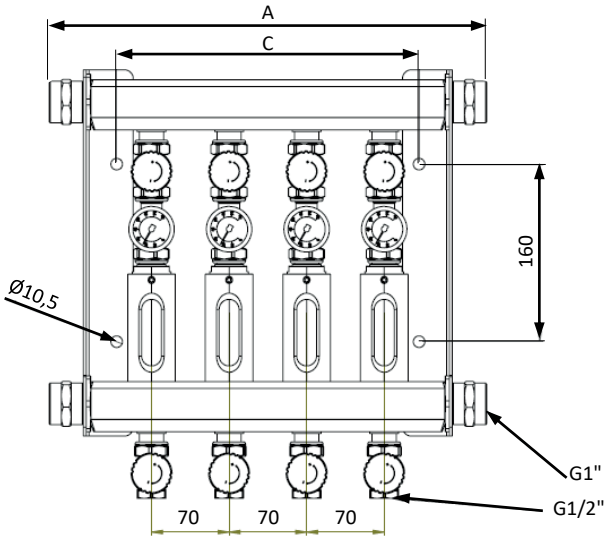

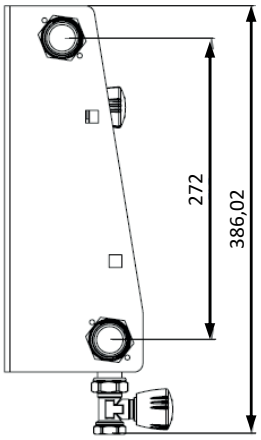

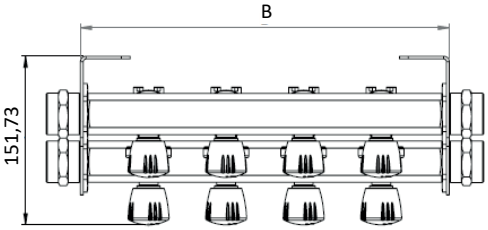

Codice-Code	N. USCITE N. GATES	A	B	C	MAX TEMP °C 10 Bar
PR201-02-G100-G012	2	255	193	133	120
PR201-03-G100-G012	3	325	263	203	
PR201-04-G100-G012	4	395	333	273	
PR201-05-G100-G012	5	465	403	343	
PR201-06-G100-G012	6	535	473	413	
PR201-08-G100-G012	8	675	613	553	
PR201-10-G100-G012	10	815	753	693	
PR201-12-G100-G012	12	955	893	833	

Promec FITTINGS

PR301

REGOLATORE DI FLUSSO PER ACQUA E OLIO DIATERMICO FINO A 160°C
FLOW REGULATOR FOR WATER AND DIATERMIC OIL UP TO 160°C

CARATTERISTICHE TECNICHE:
- Tubo standard in vetro temperato
- Struttura in acciaio inox
- Valvole di regolazione in ottone
- Termometro
- O-Rings a contatto con l'acqua in EPDM
- Valvole di entrata e uscita in ottone

TECHNICAL FEATURES:
- Tube made of tempered glass
- Inox steel structure
- Regulating Taps in brass
- Thermometer
- O'rings in contact with water in EPDM
- Brass inlet and outlet valves are inserted in the body

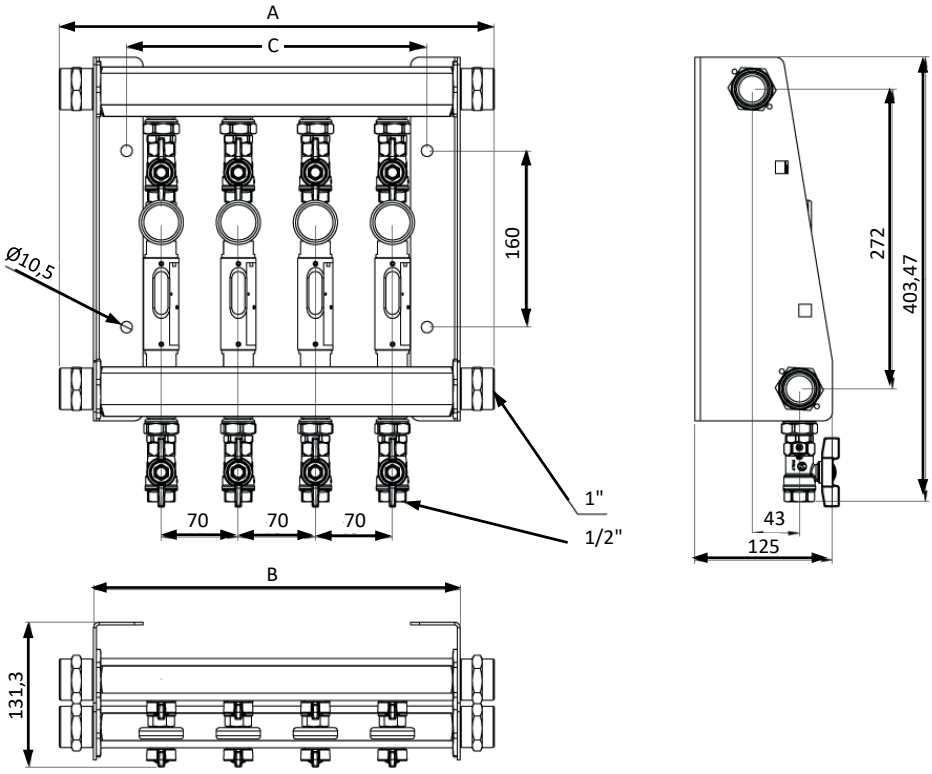

Codice-Code	N. USCITE N. GATES	A	B	C	MAX TEMP °C 10 Bar
PR301-02-G100-G012	2	255	193	133	160
PR301-03-G100-G012	3	325	263	203	
PR301-04-G100-G012	4	395	333	273	
PR301-05-G100-G012	5	465	403	343	
PR301-06-G100-G012	6	535	473	413	
PR301-08-G100-G012	8	675	613	553	
PR301-10-G100-G012	10	815	753	693	
PR301-12-G100-G012	12	955	893	833	

PR401

REGOLATORI DI FLUSSO PER ACQUA 70°C MAX – SERIE ECO
WATER 70°C MAX FLOW REGULATORS – ECO SERIES

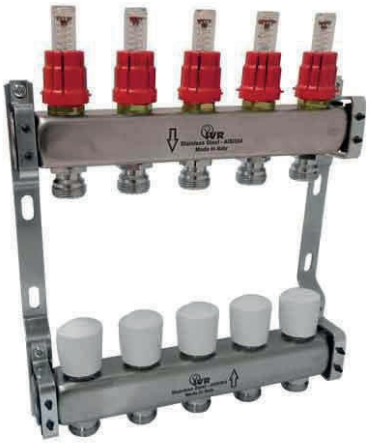

CARATTERISTICHE TECNICHE:
- Temperatura max. di esercizio: 70°C
- Pressione max. di esercizio: 6 Bar
- Pressione differenziale max.: 1 Bar
- Std. Filetti: ISO 228-1
- Materiale costruzione collettori: AISI 304

TECHNICAL FEATURES:
- Max. working temperature: 70°C
- Max. wording pressure: 6 Bar
- Max. differential pressure 1 Bar
- Threads Standard: ISO 228-1
- Manifold construction material: AISI 304

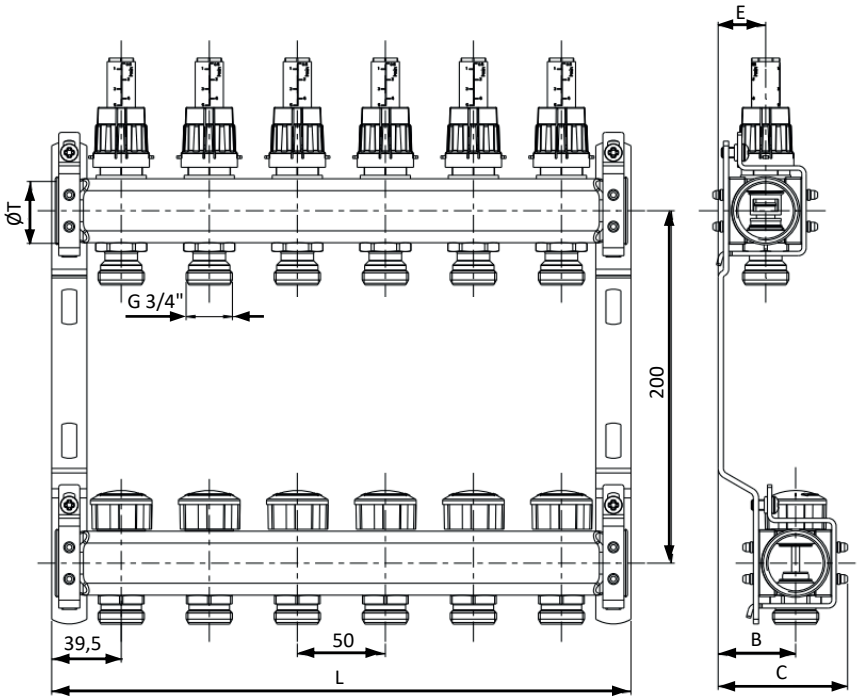

Codice-Code	N. USCITE N. GATES	B	C	E	L	T
PR401-02-G100-G034	2	44	73,5	27	129	G 1"
PR401-03-G100-G034	3	44	73,5	27	179	G 1"
PR401-04-G100-G034	4	44	73,5	27	229	G 1"
PR401-05-G100-G034	5	44	73,5	27	279	G 1"
PR401-06-G100-G034	6	44	73,5	27	329	G 1"
PR401-07-G100-G034	7	44	73,5	27	379	G 1"
PR401-08-G100-G034	8	44	73,5	27	429	G 1"
PR401-06-G114-G034	6	46,5	79,5	29,5	329	G 1"1/4
PR401-07-G114-G034	7	46,5	79,5	29,5	379	G 1"1/4
PR401-08-G114-G034	8	46,5	79,5	29,5	429	G 1"1/4
PR401-10-G114-G034	10	46,5	79,5	29,5	529	G 1"1/4
PR401-12-G114-G034	12	46,5	79,5	29,5	629	G 1"1/4

Promec FITTINGS

PM390

REGOLATORI DI FLUSSO PER ACQUA 70°C MAX – SERIE ECO
WATER 70°C MAX FLOW REGULATORS – ECO SERIES

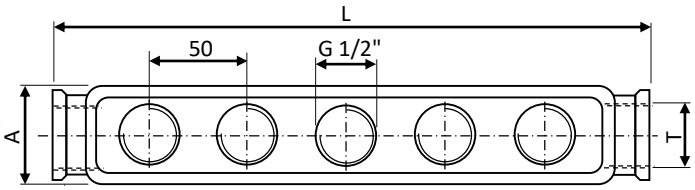

Codice-Code	N. USCITE N. GATES	H	L	T	T1
PM390-ING100-02XG034	2	44	125	G 1"	G3/4"
PM390-ING100-03XG034	3	44	175	G 1"	G3/4"
PM390-ING100-04XG034	4	44	225	G 1"	G3/4"
PM390-ING100-05XG034	5	44	275	G 1"	G3/4"
PM390-ING100-06XG034	6	44	325	G 1"	G3/4"
PM390-ING100-07XG034	7	44	375	G 1"	G3/4"
PM390-ING100-08XG034	8	44	425	G 1"	G3/4"
PM390-ING100-09XG034	9	44	465	G 1"	G3/4"
PM390-ING100-10XG034	10	44	525	G 1"	G3/4"
PM390-ING100-11XG034	11	44	575	G 1"	G3/4"
PM390-ING100-12XG034	12	44	625	G 1"	G3/4"
PM390-ING100-13XG034	13	44	675	G 1"	G3/4"
PM390-ING114-06XG034	6	49	325	G 1"1/4	G3/4"
PM390-ING114-07XG034	7	49	375	G 1"1/4	G3/4"
PM390-ING114-08XG034	8	49	425	G 1"1/4	G3/4"
PM390-ING114-09XG034	9	49	465	G 1"1/4	G3/4"
PM390-ING114-10XG034	10	49	525	G 1"1/4	G3/4"
PM390-ING114-11XG034	11	49	575	G 1"1/4	G3/4"
PM390-ING114-12XG034	12	49	625	G 1"1/4	G3/4"
PM390-ING114-13XG034	13	49	675	G 1"1/4	G3/4"

PC2260

Tappo ottone nichelato con O-Ring
Nickel-plated brass plug with O-Ring

Codice-Code	MISURA SIZE
PC2260-G012	G1/2"
PC2260-G100	G1"
PC2260-G114	G1"1/4

Codice-Code	MISURA SIZE
PC3101-2068	1/2"
PC3101-3112	1"
PC3101-3150	1"1/4

Codice-Code	MISURA SIZE
PH1198-012	1/2"
PH1198-100	1"
PH1198-114	1"1/4

PM351

Staffa singola (coppia) per PM350 e PM360
Single bracket (twin) for PM350 and PM360

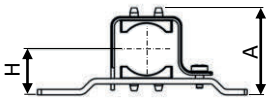

Codice-Code	MISURA SIZE	A	L	H	H1
PM351-ING100	1"	96	-	48	-
PM351-ING114	1"1/4	98	-	50	-

PM352

Staffa doppia (coppia)
Double bracket (twin

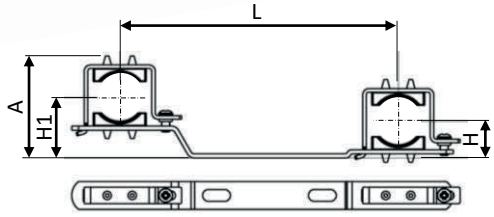

Codice-Code	MISURA SIZE	A	L	H	H1
PM352-ING100	1"	75	200	27	44
PM352-ING114	1"1/4	80	200	32	49

PRESENTAZIONE PRODOTTO

Meltmonitor® è una tecnologia di rilevamento e gestione dei dati di flusso e temperatura per i circuiti di condizionamento degli stampi che si basa su di un Software Proprietario che consente di rendere di facili: impostazione, elaborazione e visualizzazione dei dati di portata e temperatura, fondamentali per il settaggio dei parametri di condizionamento al fine di ottenere la migliore e stabile qualità di stampaggio e l'ottimizzazione massima del tempo-ciclo.

Il sistema si basa su di un sensore che rileva la portata il litri\minuto e la temperatura del fluido, che può essere acqua, acqua emulsionata o olio diatermico (solo per sensore PF020 o superiori), su ogni canale che si desidera monitorare. I dati rilevati sono registrati ed inviati a scelta in rete Intranet, in Cloud (certificato Industry 4.0) o su display touch a bordo macchina (max. 3 ore di registrazione dati). La visualizzazione avviene tramite grafico o indicatore digitale. Il cuore del sistema è un software da noi realizzato con il quale viene programmata una centralina fornita in dotazione. Fra le impostazioni che si possono settare autonomamente ci sono degli allarmi sullo scostamento della temperatura in modo da poter agire tempestivamente sulle portate e ripristinare velocemente il ciclo ottimizzato.

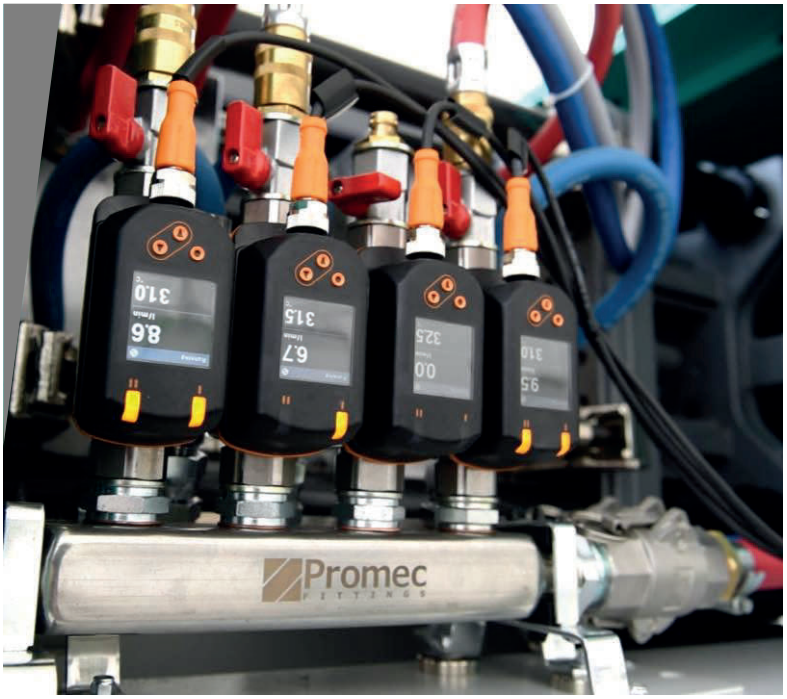

I punti di forza di questa soluzione sono la semplicità d'uso, di visualizzazione e gestione dei dati rilevati, la versatilità e flessibilità di configurazione ed installazione, oltre ad un costo estremamente competitivo.

The strengths of this solution are the simplicity of use, visualization and management of the data collected, the versatility and flexibility of configuration and installation, as well as an extremely competitive cost.

PRODUCT PRESENTATION

Meltmonitor® is a technology for the detection and management of flow and temperature data for mold conditioning circuits that is based on proprietary software that allows to make it easy: setting, processing and displaying flow and temperature data, fundamental for setting the conditioning parameters in order to obtain the best and stable molding quality and maximum optimization of the cycle-time.

The system is based on a sensor that detects the flow rate per liter/ minute and the temperature of the fluid, which can be water, emulsified water or diathermic oil (only for PF020 sensor or higher), on each channel that you want to monitor. The data collected are recorded and sent at your choice on the Intranet, in the Cloud (Industry 4.0 certified) or on a touch display on board the machine (max. 3 hours of data registration). The display is via graph or digital indicator. The heart of the system is a software created by us with which a supplied control unit is programmed. Among the settings that can be set independently there are alarms on the temperature deviation so as to be able to act promptly on the flow rates and quickly restore the optimized cycle.

PF300

VERSIONE MULTI
MULTI VERSION

Soluzione concepita per essere installata direttamente in pressa all'interno dei cancelli, e si compone di due collettori per il piano fisso e due per il piano mobile con relativi sensori, valvole a sfera e raccorderia di collegamento. Master IO-Link®, router Wi-Fi e relativi cablaggi.

The Multi version has been designed to be installed inside the operation area of the injection machine. It includes two manifolds for the fixed side and two for the mobile side, including flow sensors, ball valves and all fittings. Master IO-Link®, Wi-Fi router and cables.

Temperatura max. 90°C. Pressione max. 15 Bar.
Max. temperature 90°C. Max pressure 15 Bar.

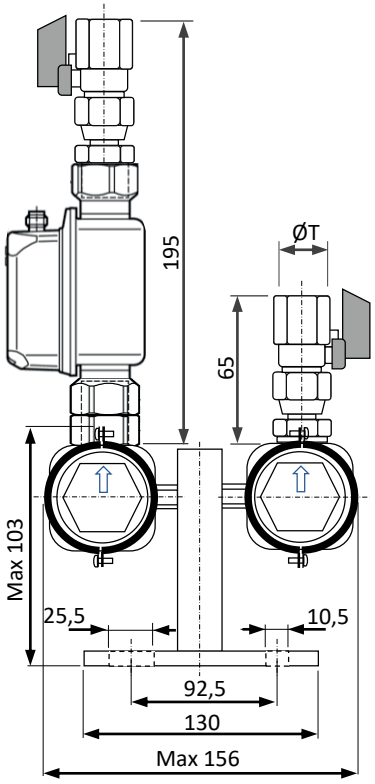

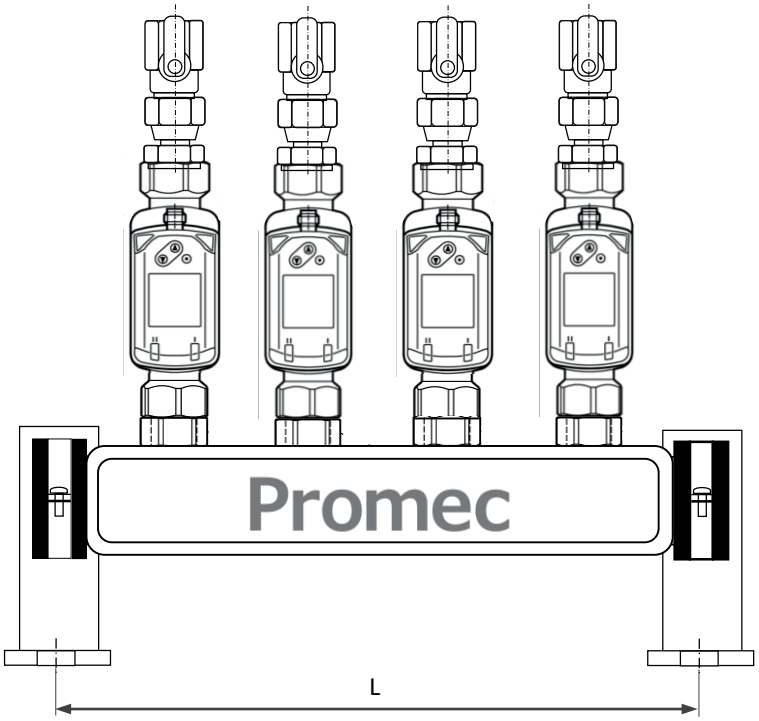

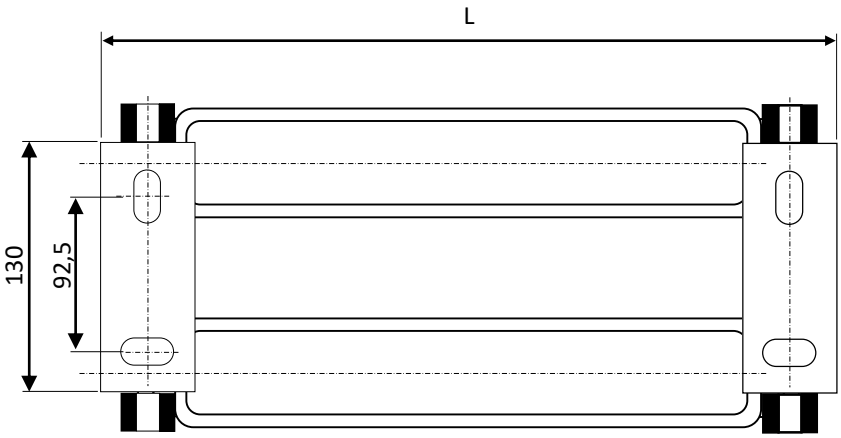

Codice-Code	N. USCITE N. GATES	L	L1	lit/min
PF300-02-1020-2	2	150	110	1...20
PF300-02-2040-2	2			2...40
PF300-03-1020-2	3	200	160	1...20
PF300-03-2040-2	3			2...40
PF300-04-1020-2	4	250	210	1...20
PF300-04-2040-2	4			2...40
PF300-05-1020-2	5	300	260	1...20
PF300-05-2040-2	5			2...40
PF300-06-1020-2	6	350	310	1...20
PF300-06-2040-2	6			2...40
PF300-08-1020-2	8	400	360	1...20
PF300-08-2040-2	8			2...40

PF300-08-2040-2 -M R T A

Master IO-Link® con cavo ethernet 5 mt.
Master IO-Link® with 5 mt. ethernet wire

Router Wi-Fi

Trasformatore 24 V sensori con attacco Rack
Switched-mode power supply 24 V DC

Cavi sensori 1* mt.
1* mt. Sensor wire

DISPONIBILE ANCHE IN VERSIONE 160°C
160°C VERSION ALSO AVAILABE

*: 2mt=B; 3mt=C; 5mt=E

PM350-MA1

Disco magnetico con gambo filettato M5
Magnetic disc with M5 threaded rod

PF900

KIT SENSORE PORTATE ELEVATE
SENSOR KIT FOR HIGH FLOW

Kit già raccordato e correttamente posizionato per il controllo di portata e temperatura su tubi da 3/4", 1", 1"1/4.

Stand-alone solution, flexible and perfect to be used on different injection machines according to specific needs.

Temperatura max. 90°C.
Pressione max. 15 Bar.
Max. temperature 90°C.
Max pressure 15 Bar.

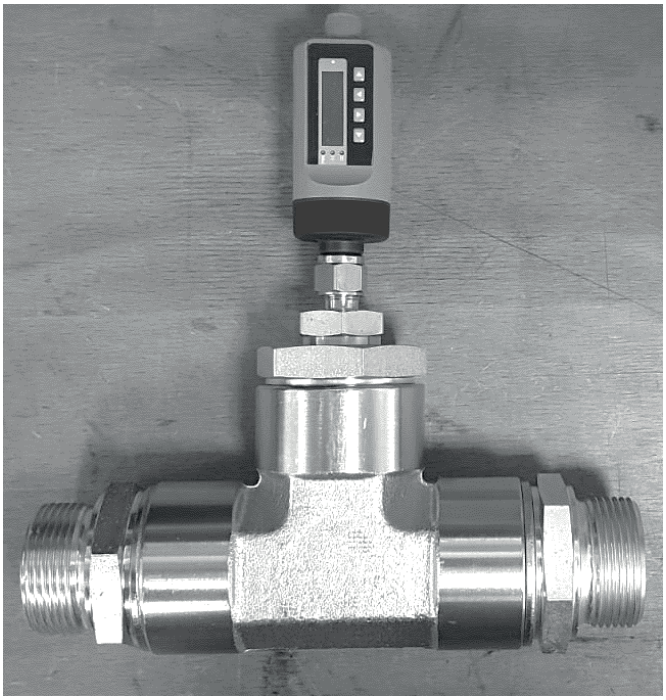

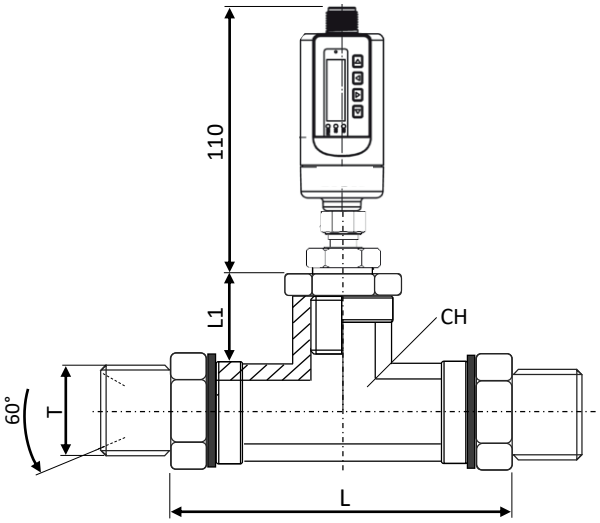

PF05-002

Trasformatore – Power unit

Codice-Code	CH	L	L1	T	lit/min
PF900-G034-T	33	92	34.5	G3/4"	5/45
PF900-G100-T	41	103	41	G1"	6.4/63.6
PF900-G114-T	48	109	43	G1"1/4	12.5/124
PF900-G112-T	65	131	53	G1"1/2	16.3/162.

PF007

Valigetta protettiva ermetica con imballo sagomato per PF010 e PF020

Codice-Code	Misure esterne External dimensions
PF008-01	258X243XH117
PF008-02	
PF008-03	

PF110

KIT MISURAZIONE DIGITALE PORTATA E TEMPERATURA
FLOW AND TEMPERATURE DIGITAL MEASUREMENT KIT

Sistema digitale di misurazione portata e temperatura per circuiti di condizionamento stampi, semplice e versatile. Utilizzo con acqua o acqua e glicole fino a 12 Bar e 90°C. Tre fasce di portata misurabile; minore è il campo di utilizzo maggiore è la precisione. Disponibili soluzioni anche per acqua ed olio diatermico fino a 180°C.
Digital flow and temperature test-system, simple and versatile. It can be used with water and water with glicol. Three flow range options. The lowest range is the most precise. Available solutions also for diatermic oil and for temperature up to 180°C.

Codice-Code	Raccordo Fitting	lit/min
PF001-0120-01	G1/2"	1...20
PF001-0240-01	G1/2"	2...40
PF001-5100-01	G3/4"	5...100

CENTRALINA TERMOREGOLAZIONE PER **ACQUA 90°C 12L**
TEMPERATURE CONTROL UNITS FOR **90°C WATER 12L**

PT100 **250**

CENTRALINA TERMOREGOLAZIONE PER **ACQUA 90°C TOUCH SCREEN**
TOUCH SCREEN TEMPERATURE CONTROL UNITS FOR **90°C WATER**

PT300 **251**

CENTRALINA TERMOREGOLAZIONE PER **ACQUA 120°C**
TEMPERATURE CONTROL UNITS FOR **120°C WATER**

PT500 **252**

Promec FITTINGS

PT100 CENTRALINA DI TERMO-REGOLAZIONE PER ACQUA 90°C
TEMPERATURE CONTROL UNITS FOR 90°C WATER

Codice-Code	Potenza risc heating power
PT103-12-060-000	3Kw
PT106-12-060-000	6Kw
PT109-12-060-000	9Kw

PORTATA POMPA	60 lit/min
PRESSIONE POMPA	3,5 Bar
FLUIDO\FLUID	Acqua-Water
POTENZA REFRIGERAZIONE\COOLING POWER	40 Kw
CAPACITA' SERBATOIO\TANK CAPACITY POTENZA POMPA\PUMP POWER	12 lit. 0,5 Kw
CONNESSIONE IDRAULICA CARICO-SCARICO\HYDRAULIC CONNECTION INLET-	3/4" BSPP
CONNESSIONE IDRAULICA CIRCUITI\CIRCUITS HYDRAULIC CONNECTION	1/2" BSPP
PESO\WEIGHT	40 kg
ALIMENTAZIONE\VOLTAGE CONNECTION	400V 3 Ph 50-60/PE

CARATTERISTICHE TECNICHE SMART:
- Controllo elettronico PID della temperatura in fase di riscaldamento e raffreddamento.
- Pompa operativa in pressione e depressione
- Segnale rottura tubi e perdite
- Segnale di mal funzionamento
- Serbatoio e resistenze in acciaio Inox
- Sistema di raffreddamento indiretto
- Sensore di livello con elettrodo
- Sistema automatico di carico acqua
- Termostato di sicurezza
- Allarme acustico

OPZIONI AGGUNTIVE:
- Kit raddoppio uscite
- Indicatore di portata
- Sensore esterno
- Indicazione temperatura di ritorno
- Relé allo stato solido
- Interfaccia PCB card TTY 20mA / RS485, segnali input / output 4-20mA, 0-10 volt

TECHNICAL DATA SMART:
- PID temperature control in heating and cooling process
- Pump works under pressure and reverse sense
- Hose break and leakage monitor
- Sensor failure monitor
- Tank and heaters made of stainless steel
- Indirect cooling system
- Water level sensor trought electrode
- Automatic water feeding
- Security thermostat
- Acoustic alarm

OPTIONS:
- Double outlets kit
- Flow rate control
- External sensor
- Return of process temperature indication
- Solid State Relais
- Serial Interface PCB card TTY 20mA / RS485, input /output 4-20mA, 0-10 volt signals

PT300

CENTRALINA DI TERMO-REGOLAZIONE PER ACQUA 90°C **CON TOUCH SCREEN**
TEMPERATURE CONTROL UNITS FOR 90°C WATER **WITH TOUCH SCREEN**

Codice-Code	RISCALDAMENTO HEATING	RAFFREDDAMENTO COOLING	POMPA PUMP	SERBATOIO TANK	MAX BAR POMPA MAX BAR PUMP	PESO WEIGHT
PT306-020-000	6Kw	40Kw	60 lit/min	20 lit.	3,5	55 Kg.
PT309-020-000	9Kw				3,5	
PT312-020-000	12Kw				3,5	
PT318-020-000	18Kw				3,5	
PT318-035-000				35 lit	3,5	65 Kg
PT324-035-000	24Kw			35 lit	3,5	65 Kg
PT330-035-000	30Kw			35 lit	3,5	65 Kg

FLUIDO\FLUID	Acqua-Water
CONNESSIONE IDRAULICA CARICO-SCARICO\HYDRAULIC CONNECTION INLET-OUTLET	3/4" BSPP
CONNESSIONE IDRAULICA CIRCUITI\CIRCUITS HYDRAULIC CONNECTION	1/2" BSPP
ALIMENTAZIONE\VOLTAGE CONNECTION	400V 3 Ph 50-60/PE

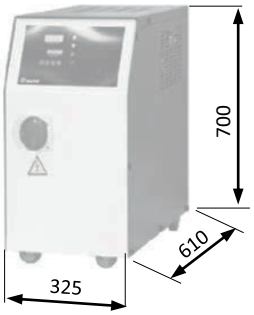

CARATTERISTICHE TECNICHE SMART:
• Controllo elettronico PID della temperatura in fase di riscaldamento e raffreddamento.
• Pompa operativa in pressione e depressione
• Segnale rottura tubi e perdite
• Segnale di mal funzionamento
• Serbatoio e resistenze in acciaio Inox
• Sistema di raffreddamento indiretto
• Sensore di livello con elettrodo
• Sistema automatico di carico acqua
• Termostato di sicurezza
• Allarme acustico
OPZIONI AGGUNTIVE:
• Kit raddoppio uscite
• Indicatore di portata
• Sensore esterno
• Indicazione temperatura di ritorno
• Relé allo stato solido
• Interfaccia PCB card TTY 20mA / RS485, segnali input / output 4-20mA, 0-10 volt

TECHNICAL DATA SMART:
• PID temperature control in heating and cooling process
• Pump works under pressure and reverse sense
• Hose break and leakage monitor
• Sensor failure monitor
• Tank and heaters made of stainless steel
• Indirect cooling system
• Water level sensor trought electrode
• Automatic water feeding
• Security thermostat
• Acoustic alarm
OPTIONS:
• Double outlets kit
• Flow rate control
• External sensor
• Return of process temperature indication
• Solid State Relais
• Serial Interface PCB card TTY 20mA / RS485, input /output 4-20mA, 0-10 volt signals

Promec FITTINGS

PT500 CENTRALINA DI TERMOREGOLAZIONE PER ACQUA 120°C
TEMPERATURE CONTROL UNITS FOR 120°C WATER

Codice-Code	RISCALDAMENTO HEATING	RAFFREDDAMENTO COOLING	POMPA PUMP	SERBATOIO TANK	MAX BAR POMPA MAX BAR PUMP	PESO WEIGHT
PT509-D-000	9 Kw	diretto direct	200 lit/min	-	2,5 Bar	65 Kg
PT516-D-000	16 Kw					

FLUIDO\FLUID	Acqua-Water
CONNESSIONE IDRAULICA CARICO-SCARICO\HYDRAULIC CONNECTION INLET-OUTLET	1" BSPP
CONNESSIONE IDRAULICA CIRCUITI\CIRCUITS HYDRAULIC CONNECTION	1/2" BSPP
ALIMENTAZIONE\VOLTAGE CONNECTION	400V 3 Ph 50-60/PE

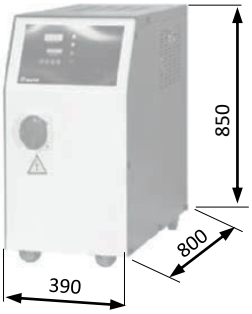

CARATTERISTICHE TECNICHE SMART:
- Controllo elettronico PID della temperatura in fase di riscaldamento e raffreddamento.
- Pompa operativa in pressione e depressione
- Segnale rottura tubi e perdite
- Segnale di mal funzionamento
- Serbatoio e resistenze in acciaio Inox
- Sistema di raffreddamento indiretto
- Sensore di livello con elettrodo
- Sistema automatico di carico acqua
- Termostato di sicurezza
- Allarme acustico

OPZIONI AGGUNTIVE:
- Indicatore di portata
- Sensore esterno
- Indicazione temperatura di ritorno
- Relé allo stato solido
- Interfaccia PCB card TTY 20mA / RS485, segnali input / output 4-20mA, 0-10 volt

TECHNICAL DATA SMART:
- PID temperature control in heating and cooling process
- Pump works under pressure and reverse sense
- Hose break and leakage monitor
- Sensor failure monitor
- Tank and heaters made of stainless steel
- Indirect cooling system
- Water level sensor trought electrode
- Automatic water feeding
- Security thermostat
- Acoustic alarm

OPTIONS:
- Flow rate control
- External sensor
- Return of process temperature indication
- Solid State Relais
- Serial Interface PCB card TTY 20mA / RS485, input /output 4-20mA, 0-10 volt signals

TUBI TRASFERIMENTO CALORE
HEAT TRANSFER RODS

PE301 254

VALVOLA SFOGO ARIA
AIR-VENT VALVE

PE210 255

VALVOLA SFOGO ARIA
AIR-VENT VALVE

PE211

VALVOLA SFOGO ARIA
AIR-VENT VALVE

PE212

FILTRO DEFANGATORE MAGNETICO
MAGNETIC DIRT FILTER

PE202 256

DISPOSITIVO MANUALE SVUOTAMENTO CIRCUITI
HAND-EQUIPMENT FOR CIRQUIT EMPTYING

PE121 257

POMPA MANUALE PER IL TEST DI TENUTA CIRCUITI
MANUAL PUMP FOR MOULD COOLING CIRCUITS TEST

PE101 258

KIT PER IL TEST DI TENUTA CIRCUITI
KIT FOR COOLING MOULD CIRCUITS TEST

PE102

CENTRALINA IDRAULICA PER IL TEST DI TENUTA CIRCUITI
HYDRAULIC PUMP FOR MOULD COOLING CIRCUITS TEST

PE111 259

CENTRALINA OLEDINAMICA CARRELLABILE
HYDRAULIC CYLINDER PORTABLE TEST UNIT

PE112 260

TERMOMETRO - THERMOMETER

PC2190 261

Promec FITTINGS

PE301 TUBI DI TRASFERIMENTO CALORE
HEAT TRANSFER RODS

Descrizione: Il tubo di trasferimento calore consente di dissipare il calore generato dall'iniezione della plastica sul punzone che non si può condizionare direttamente mediante la sua elevata conducibilità termica. Per il corretto funzionamento il tubo deve rimanere fuori dall'area di induzione termica per almeno 2/3 della sua lunghezza e, per almeno 1/3 a contatto con un canale di condizionamento idraulico. I vantaggi sono quelli degli ingombri estremamente ridotti e della facilità di installazione.

Description: The heat transfer rod has a good cooling effect. The internal refrigerant provides a heat conductivity which is 200 times more than brass pipes, with also a better thermal response. At least 2/3 of the pipe has to remain out from the heating area and at least 1/3 has to be in contact with cooling water mould circuit as to dissipate the heat. Advantages: water cooling circuits size reduction and simplification. Reduction of mould size. Fast installation.

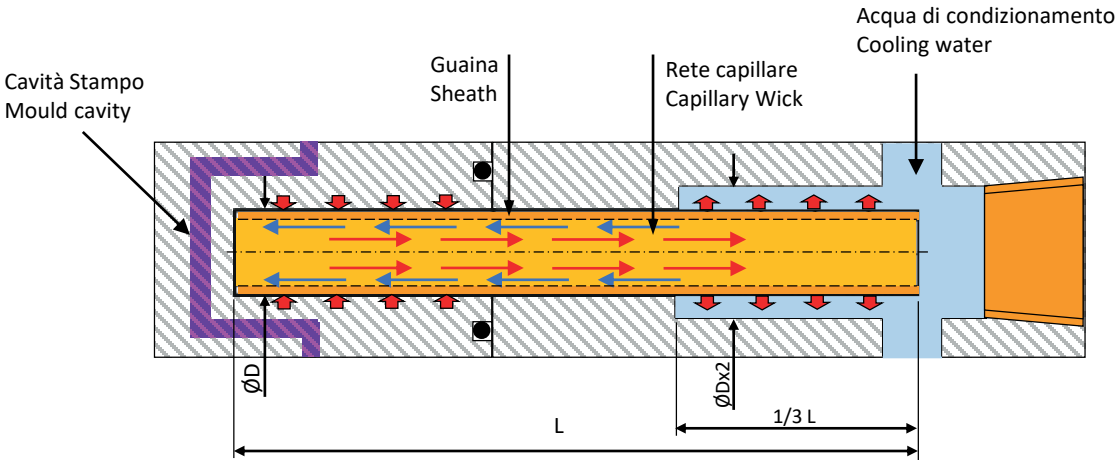

Codice-Code	ØD	L
PE-301-02-050	2	50
PE-301-02-075	2	75
PE-301-02-100	2	100
PE-301-02-125	2	125
PE-301-02-150	2	150
PE-301-02-200	2	200
PE-301-03-050	3	50
PE-301-03-075	3	75
PE-301-03-100	3	100
PE-301-03-125	3	125
PE-301-03-150	3	150
PE-301-03-200	3	200
PE-301-04-050	4	50
PE-301-04-075	4	75
PE-301-04-100	4	100
PE-301-04-125	4	125

Codice-Code	ØD	L
PE-301-04-150	4	150
PE-301-04-200	4	200
PE-301-06-075	6	75
PE-301-06-100	6	100
PE-301-06-125	6	125
PE-301-06-150	6	150
PE-301-06-200	6	200
PE-301-08-100	8	100
PE-301-08-125	8	125
PE-301-08-150	8	150
PE-301-08-200	8	200
PE-301-10-100	8	100
PE-301-10-125	10	125
PE-301-10-150	10	150
PE-301-10-200	10	200

Installazione :
- La sede di installazione deve avere un diametro pari a quello del tubo, maggiorato di 0,1 mm.
- In fase di montaggio applicare a tutta la superficie del tubo del grasso ad alta conducibilità termica.
- Inserire il tubo nella sede. La temperatura di esercizio applicabile va da +30°C a +200°C, la Pressione massima 20 Bar.
- Non tagliare o tornire il tubo. Non schiacciarlo o provocare urti accidentali. Il funzionamento è garantito esclusivamente se il tubo è perfettamente integro.
- Non utilizzare olio diatermico.

Installation Guidelines :
- Installed holes shall be bigger 0.1 mm than heat pipe.
- Use a heat transfer grease to the full space when install heat pipe.
- Insert heat pipe, end position shall be on side of heat pipe. Working temperature: 30°C-200°C (Burst temperature 250°C); max. working pressure 20 Bar.
- Do not cut or disassemble. Bending or squashing the heat transaction pipe hampers its cooling function.
- Do not use diathermic oil for cooling

PE210 VALVOLA AUTOMATICA DI SICUREZZA DA 1,5 A 6 BAR
AUTOMATIC AIR-VENT FROM 1,5 TO 6 BAR

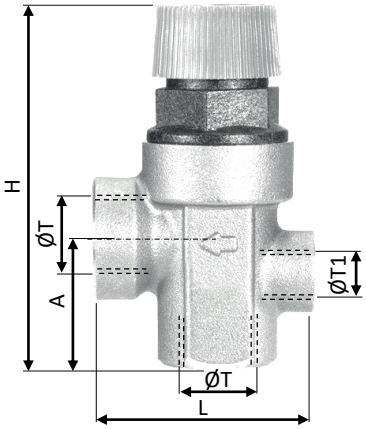

Codice-Code	A	H	L	ØT	ØT1	Max Bar	Max °C
PE210-20-G012	26	74,5	46	G1/2"	G1/4"	2	110
PE210-40-G012						4	
PE210-60-G012						6	
PE210-20-G034	26	76	52	G3/4"		2	
PE210-40-G034						4	
PE210-60-G034						6	
PE210-20-G100	32	85	58,5	G1"		2	
PE210-40-G100						4	
PE210-60-G100						6	

PE211 VALVOLA SFOGO ARIA – AIR-VENT VALVE

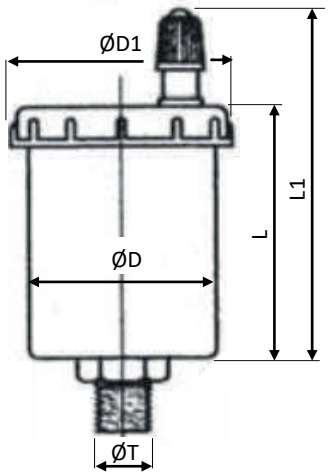

Codice-Code	ØD	ØD1	L	L1	ØT	Max Bar	Max °C
PE211-G038	38	46,5	50	66	G3/8"	10	110
PE211-G012	38	46,5	50	66	G1/2"		
PE211-G034	38	46,5	50	66	G3/4"		
PE211-G100	38	46,5	72	88	G1"		

PE212 VALVOLA SFOGO ARIA USCITA A 90° - 90° AIR-VENT VALVE

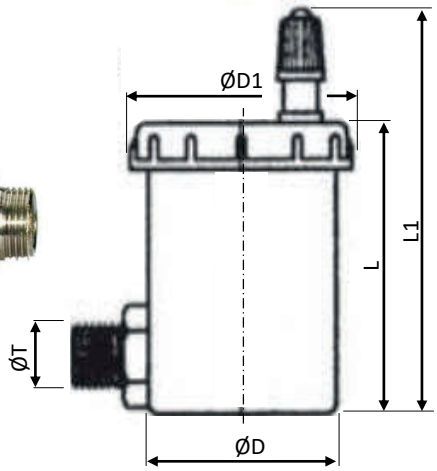

Codice-Code	ØD	ØD1	L	L1	ØT	Max Bar	Max °C
PE212-G038	39	42	42	61	G3/8"	10	110
PE212-G012	39	42	42	61	G1/2"		

Promec FITTINGS

PE202 FILTRO DEFANGATORE MAGNETICO – MAGNETIC DIRT FILTER

Il defangatore magnetico PE201 consente di eliminare sporco e detriti – ruggine, trucioli, fanghi – dal fluido termovettore che circola all'interno degli impianti di termoregolazione. Costruzione in ottone con filtro in acciaio Inox. Possibilità di utilizzo con glicole fino al 50%. Il filtro deve essere installato sempre con orientamento verticale nel senso dell'immagine qui sotto riportata.

The magnetic dirt separator PE201 allows for the removal of dirt and debris – rust, mud, etc. - from the fluid circulating within the thermoregulation circuits. Possibility to be used with max. glycol at 50%. The filter must be installed in vertical position according to the following picture.

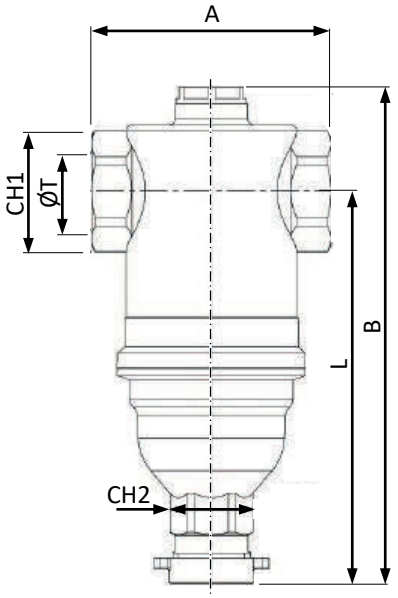

Codice-Code	A	B	CH1	CH2	L	ØT	Max Bar	Max °C
PE202-G034	82	205	37	26	170	G3/4"	10	110
PE202-G034-V						G3/4"		180
PE202-G100						G1"		110
PE202-G100-V						G1"		180
PE202-G114	90	241	54		192	G1"1/4		110
PE202-G114-V						G1"1/4		180
PE202-G112						G1"1/2		110
PE202-G112-V						G1"1/2		180

DIAGRAMMA PERDITE DI CARICO
PRESSURE DROPS DIAGRAM

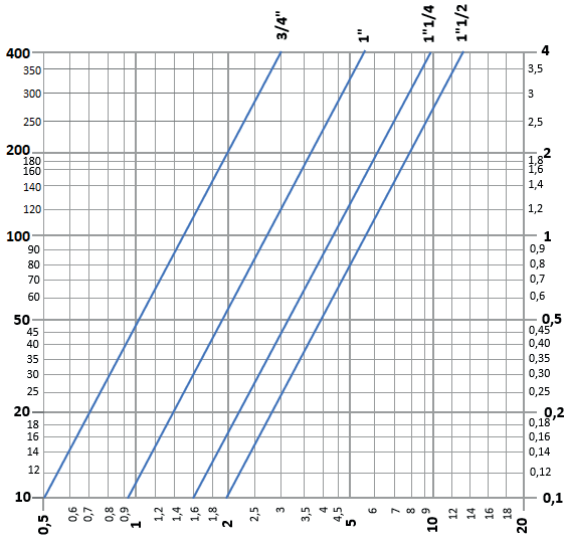

PE121 DISPOSITIVO DI SVUOTAMENTO CIRCUITI - COOLING CIRCUIT EMPTYING DEVICE

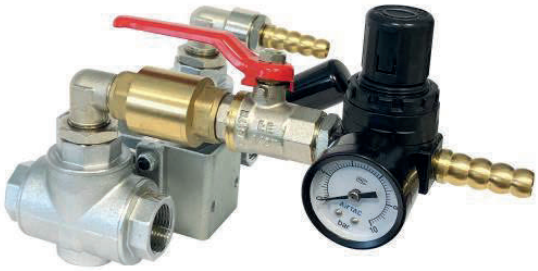

ISTRUZIONI DI COLLEGAMENTO E FUNZIONAMENTO – CONNECTION AND OPERATION INSTRUCTIONS

LEVA IN POSIZIONE A – circuito in funzione operativa.
LEVA IN POSIZIONE B – circuito in svuotamento

LEVER IN POSITION A – the circuit is operating
LEVER IN POSITION B – the circuit is emptying

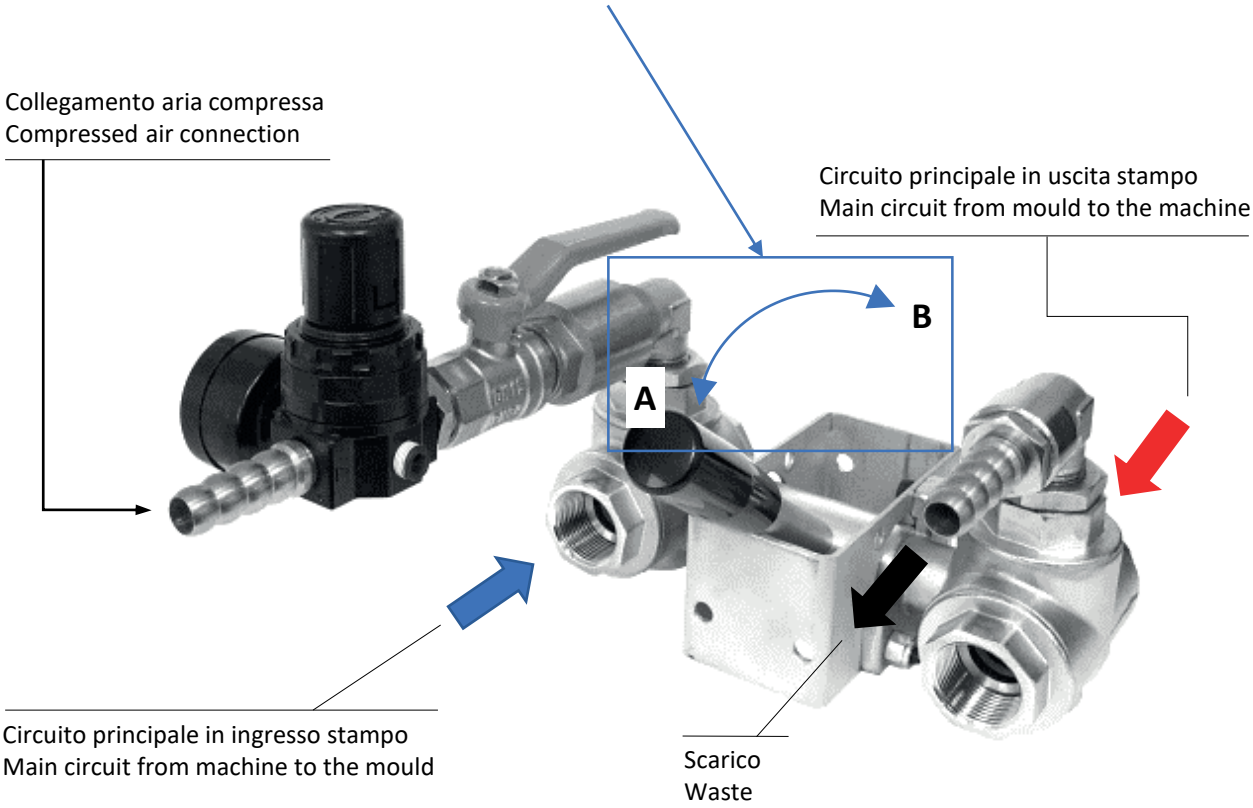

PE101

POMPA MANUALE PER IL COLLAUDO DI IMPIANTI IDRAULICI E CONDIZIONAMENTO STAMPI FINO A 60 BAR CON SERBATOIO VERTICALE.
PRESSURE TEST PUMP FOR HYRAULIC CIRCUITS TEST AND MOULD CONDITIONING UP TO 60 BAR WITH VERTICAL LAYOUT

Codice-Code	Catatteristiche tecniche Technical Features	
PE101	Peso - Weight	10 Kg
	Capacità serbatoio - Tank capacity	12 L
	Dimensioni - Sizes	260 x 260 x 540
	Tubo alta pressione - High pressure hose 1500 mm - FGD 1/2" - FGD 1/2"	
	Pressione massima - Max pressure	60 Bar
	Temperatura maxdi esercizio - Max working temperature	90°C*
	Fluidi utilizzabili - Usable fluids: Acqua, Acqua+Glicole - Water, Water+Glicol	

* Su richiesta disponibile con O-Rings FKM 180°C - Available on request with FKM O-Rings 180°C

PE102

KIT PNEUMATICO PER IL TEST DI TENUTA CIRCUITI CONDIZIONAMENTO STAMPI
PNEUMATIC KIT FOR COOLING MOULD CIRCUITS

Estremamente semplice, compatto ed economico. Un kit per verificare la tenuta di un circuito idraulico utilizzando solo aria compressa. Fornito completo di raccordi rapidi a scelta.
Extremely simple, compact and price convenient. A test-kit for hydraulic circuits by using only compressed air. The set is supplied completed with standard quick couplings as preferred.

Codice-Code	Misura Size	Standard innesti rapidi Quick coupling standard
PE102-1100-09	9	Europeo - European
PE102-1100-13	13	Europeo - European
PE102-1200-09	9	Internazionale - International
PE102-1200-13	13	Internazionale - International
PE102-1300-06	6	Francese - French
PE102-1300-09	9	Francese - French
PE102-1300-12	12	Francese - French
PE102-1500-08	8	Francese-eco - Eco-French
PE102-1500-12	12	Francese-eco - Eco-French

PE111 CENTRALINA DI TEST CIRTUITI DI CONDIZIONAMENTO STAMPI
MOULD-COOLING CIRCUIT TEST UNIT

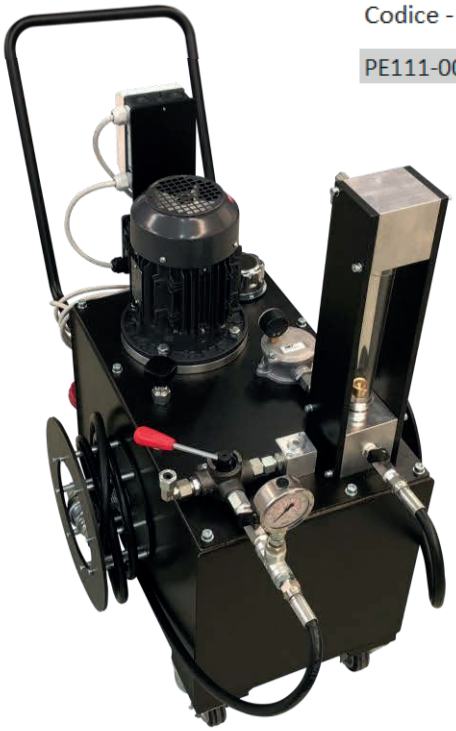

Codice - Code	Catatteristiche tecnice Technical Features	
PE111-005-050	Peso - Weight	55 Kg
	Capacità serbatoio - Tank capacity	50 L
	Dimensioni - Sizes	
	Potenza motore elettrico - Electric motor power	0,75 kW
	Tensione alimentazione - Voltage	230/400 V (50hz)
	Portata	5 lit/min
	Pressione massima - Max pressure	50 Bar (regolabile-adjustable)
	Temperatura max - Max working temperature	60°C
	Fluidi utilizzabili - Usable fluids	Acqua+Glicole - Water+Glicol
	Viscosità minima - Min. viscosity	12 mm^2/s
	Misurazione portata - flow control system	analogica - analogic

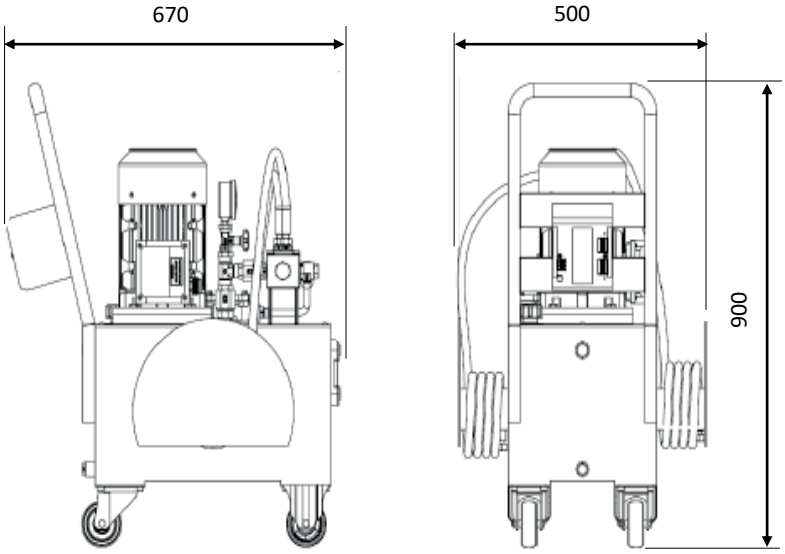

Promec FITTINGS

PE112

CENTRALINA OLEDINAMICA CARRELLABILE
HYDRAULIC CYLINDER PORTABLE TEST UNIT

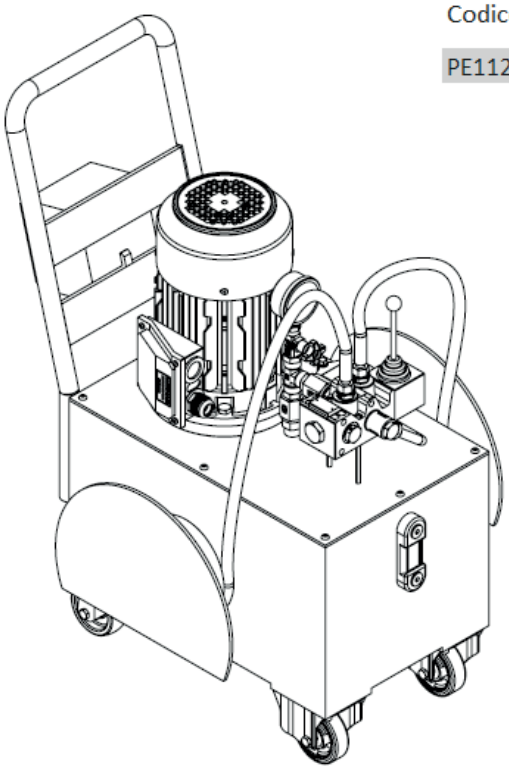

Codice - Code	Catatteristiche tecnice Technical Features	
PE112-005-030	Peso a vuoto - empty machine weight	57,5 Kg
	Capacità serbatoio - Tank capacity	30 L
	Portata - Flow	5 L/min
	Pressione massima - Max pressure	150 Bar
	Temperatura maxdi esercizio - Max working temperature	-5°C / 60°C
	Fluidi utilizzabili - Usable fluids	VG46
	Potenza motore - Power	1,5 kW
	Tensione alimentazione - Voltage	230/400 V trifase

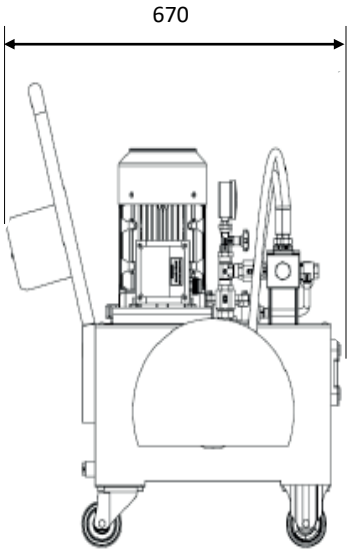

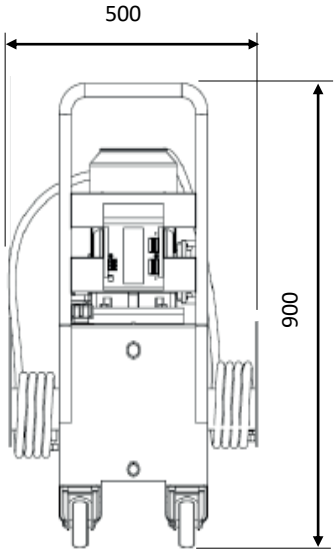

PC2190

TERMOMETRO CON BOCCHETTONE MAX 80°C FIL. MASCHIO-FEMMINA 1” BSPP
THERMOMETER WITH TAIL PIECE MAX 80°C WITH 1” BSPP MALE-FEMALE THREAD

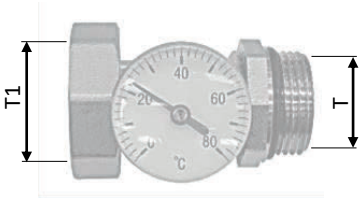

Codice-Code	T	T1
PC2190-G100	G 1"	G 1"1/4
PC2190-G114	G 1"1/4	G 1"1/2

PlaSteel group

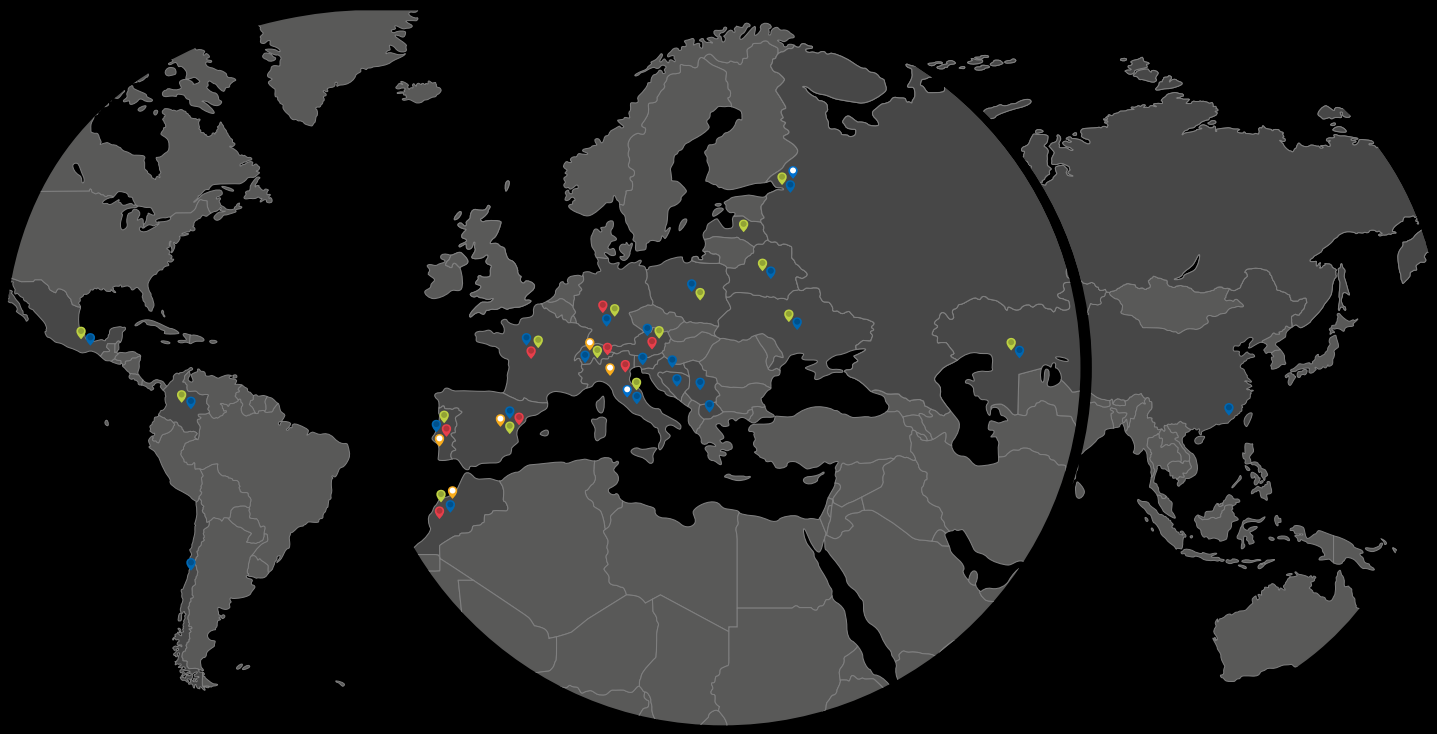

www.plasteelgroup.com - info@plasteelgroup.com

Ranco Srl

iHR Srl

Tecnostar Group Srl

Technology & Solutions Srl

Promec Fittings Srl

Promec Fittings Srl
Via Cascinetta, 83 - 28013 Gattico Veruno (NO), Italy
www.promecfittings.com - info@promecfittings.com